SPARE PARTS INSTRUCTIONS # 40

Date Created: 15/12/2016 **Product:** X-WAM

Title: Outrigger Carriage Ram Spear and Seal Replacement

SAFETY! Before attempting to make any adjustments or carry out maintenance on the mower, review the hazard identification table (section 3a of your Operator Manual) and take all necessary precautions.

Note: Ensure a clean working environment when servicing hydraulic componentry. A small piece of debris can damage seals causing oil leaks and premature component failure. Hydraulic equipment should be serviced by a specialist in this field!

CAUTION: Residual oil may leak from hydraulic componentry during disassembly creating a slip hazard.

Once the X-WAM Carriage Ram has been removed from the X-WAM, place on a work bench.
Secure the Ram using clamps or equivalent to prevent it from moving during disassembly.

Note:
Use Soft Jaws or equivalent with the clamps to protect the Ram Cylinder!

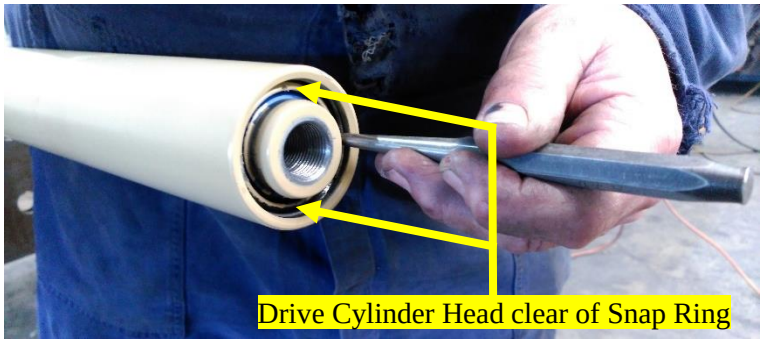

Use a Pin Punch and a Hammer to carefully tap the Cylinder Head **INWARDS** to gain access to the Snap Ring.
The following image shows the cylinder head when it is driven inwards.

Note:
Use caution during this step!
DO NOT use the punch on the head seal!

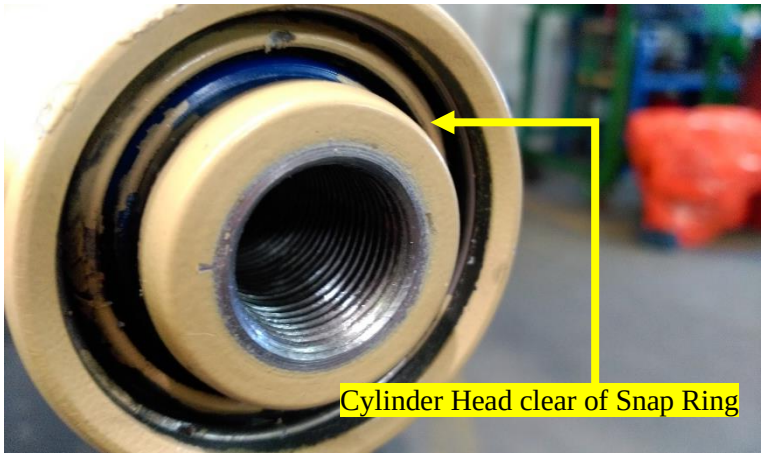

Note:
This image shows the Cylinder Head once driven in.

It does not need to move far, just far enough to access the Snap Ring for removal.

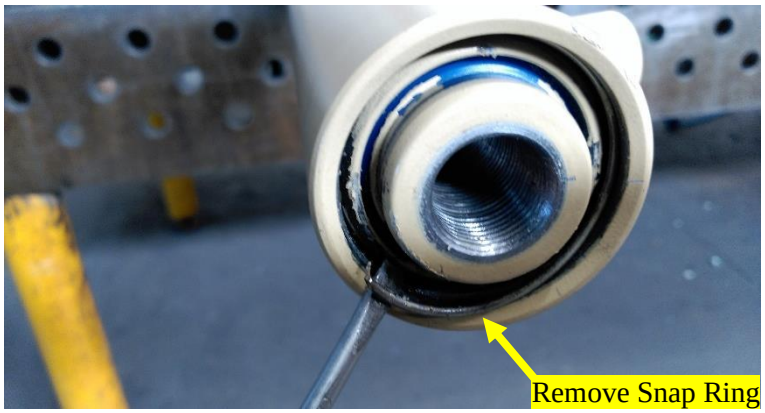

Staring at one end, use a Flat Bladed Screwdriver to carefully prise the Snap Ring out of its groove.

The following image shows the Snap Ring once removed from the Ram.

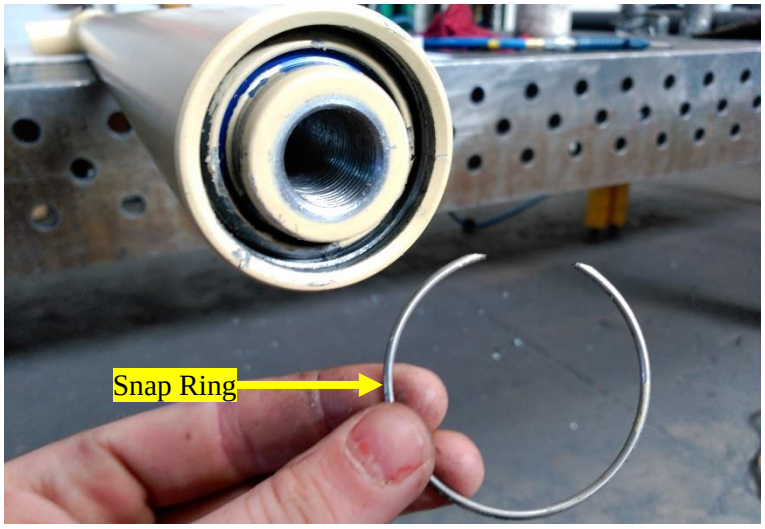

Note:
This image shows the Snap Ring once removed from the Ram.

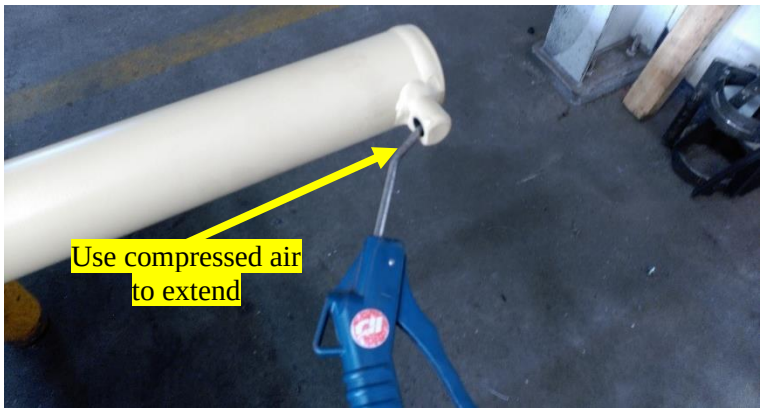

At the Cylinder Base end of the Ram, carefully apply compressed air into this port to extend the Ram Spear around **300mm (12”).** This will remove the Cylinder Head from the Ram Cylinder.

Note:
Use compressed air with extreme caution! Wear all appropriate safety equipment!

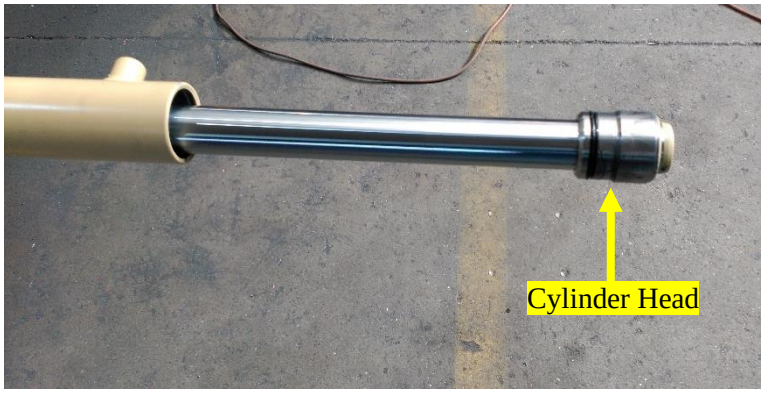

Note:
This image shows Ram Spear extended from the Ram Cylinder.

The Cylinder Head is present at the end of the Ram Spear.

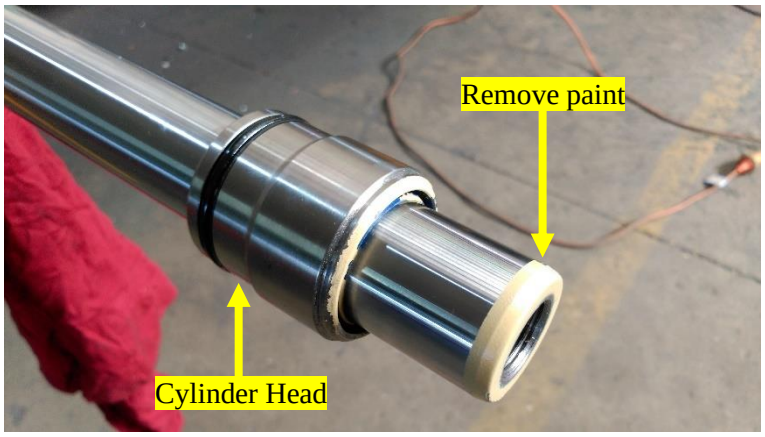

Push the Cylinder head back from the end of the Ram Spear.

Carefully use a fresh Razor Blade to remove any paint from the circumference of the Ram Spear.

Note:
This is to minimise the chances of damaging the Cylinder Head Seal during removal.

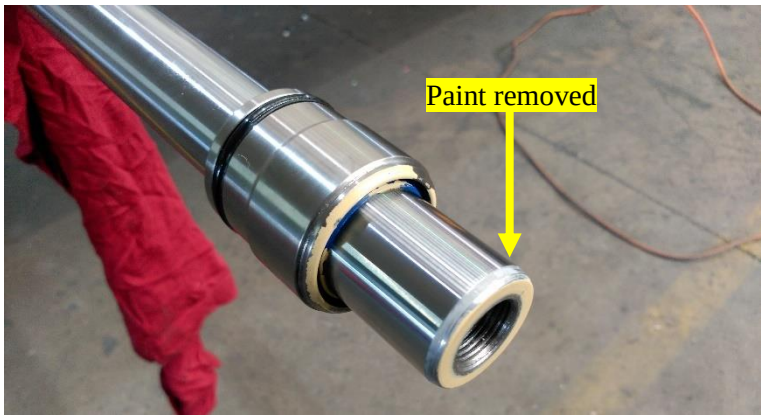

Note:
This image shows the paint removed from the end of the Ram Spear!

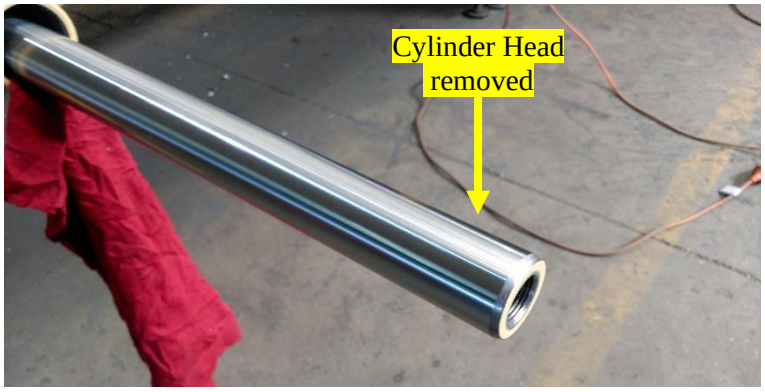

Remove the Cylinder Head from the Ram Spear.

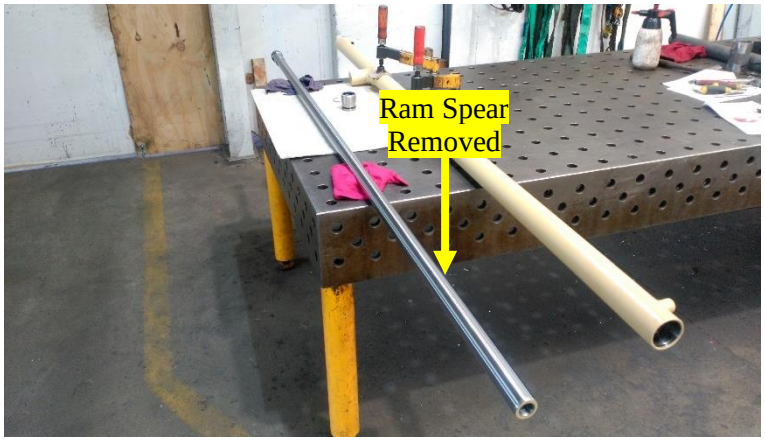

Extract the Ram Spear from the Ram Cylinder.

Note:
The Ram Spear is long and heavy, a two-man lift is recommended for this operation!

At this stage, carefully clean the Ram Cylinder and check for scoring or pitting.

If the cylinder is badly scored or pitted, it will need replacing, contact Trimax Mowing Systems.

Once clean, oil the inside of the cylinder bore using Hydraulic Oil.

Collect the replacement Ram Spear **(408-000-034)**

This comes suppled with the Piston and Piston Seals already fitted as shown opposite.

Apply a coating of Hydraulic Oil to the Piston and Piston Seals as shown.

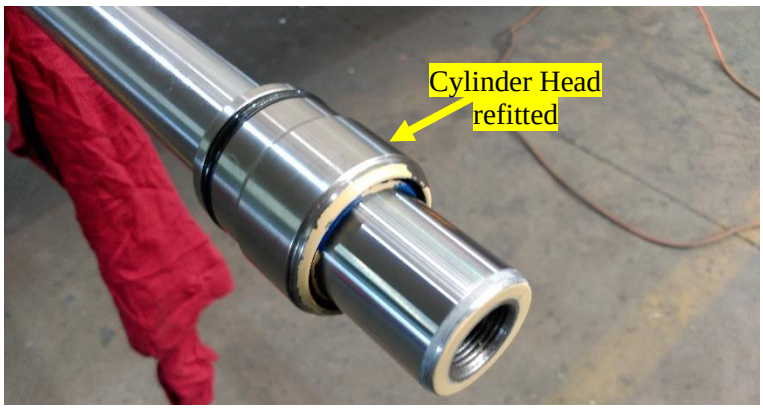

Apply a coating of Hydraulic Oil to the Cylinder Head and Head Seals as shown.

Refit the Cylinder Head over the free end of the Ram Spear.

Ensure that it is orientated as shown in the image opposite with the external O-Rings facing towards the Piston End of the Spear.

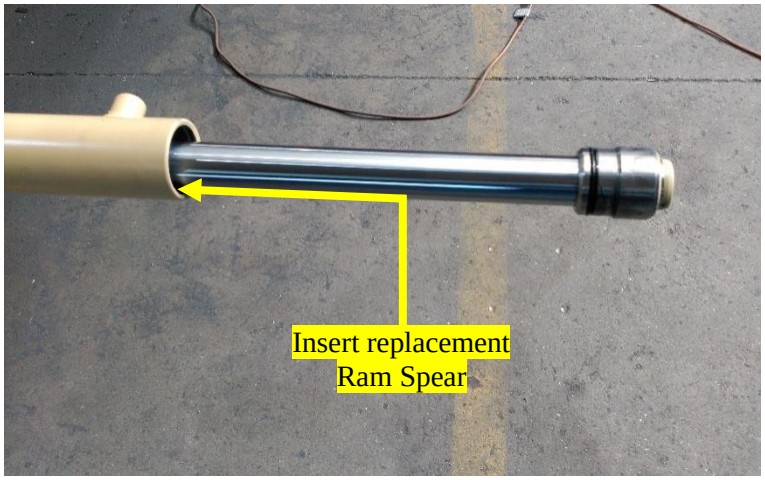

Carefully insert the replacement Ram Spear Assembly, piston end first, back into the Ram Cylinder.
Support the Ram Spear, **DO NOT** allow it to contact the sides of the Ram Cylinder during insertion, damage or scoring may occur if this happens!

Note:
The Ram Spear is long and heavy, a two-man lift is recommended for this operation!

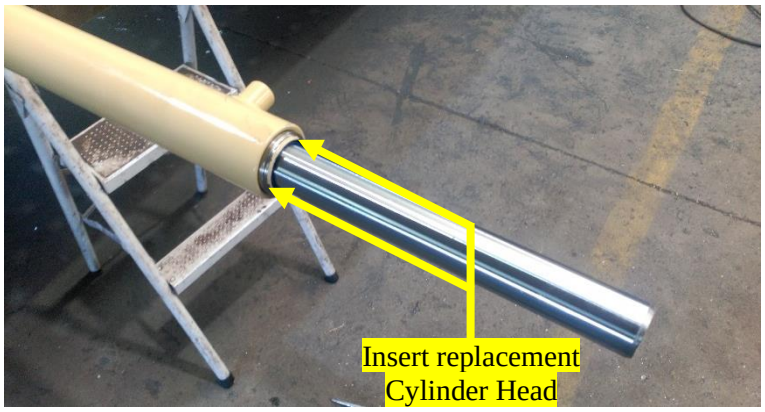

Carefully slide the Cylinder Head into the Ram Cylinder as shown.

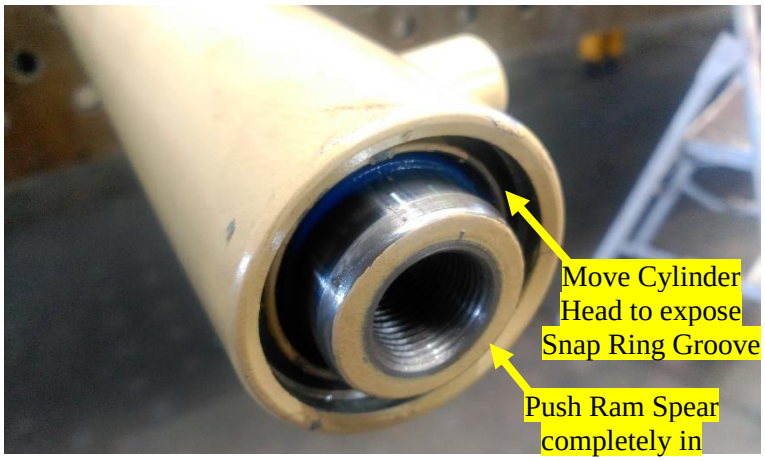

Slide the Ram Spear inwards until it cannot travel any further.

Then Push the Cylinder head in to the position shown to expose the Snap Ring Groove.

A Pin Punch and Hammer may be needed to carefully tap the Cylinder Head to the position shown.

Note:
Use caution during this step!
DO NOT allow the Punch to contact the Head Seal or Ram Spear!

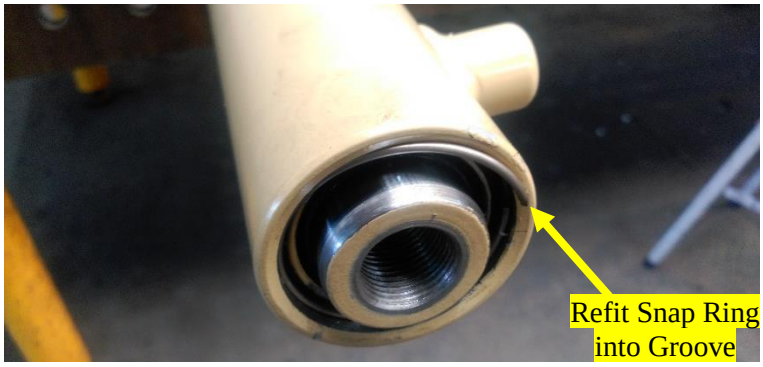

Re-insert the Snap Ring back into its groove present in the end of the Ram Cylinder.

IMPORTANT:
Prior to continuing, ensure that the Snap Ring is **FULLY** seated in its groove!

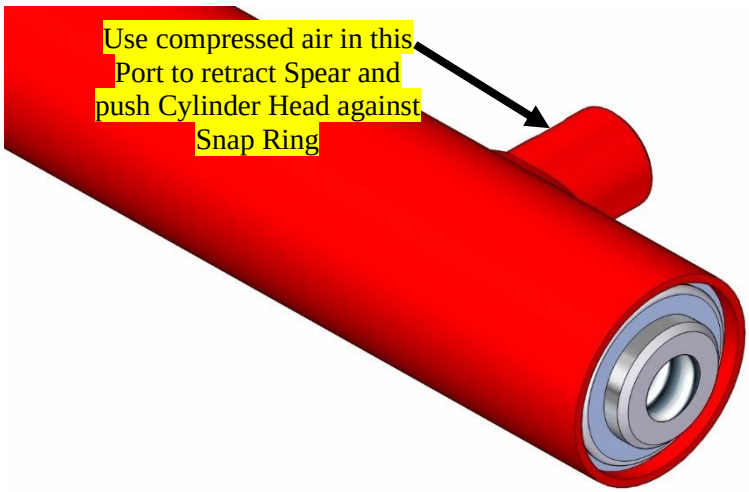

At the Ram Spear end of the Ram, carefully **apply** compressed air into this port to pressurize this side of the Ram. This will push the Cylinder Head against the Snap Ring.
This will also ensure that the Ram is **COMPLETELY** retracted prior to fitment to the X-WAM.

Note:
Use compressed air with extreme caution! Wear all appropriate safety equipment!

IMPORTANT:
Ensure the Ram Spear is **COMPLETELY** Retracted, this is **CRITICAL** to the set-up of the Carriage Ram Bolt used to secure the Ram to the Carriage!

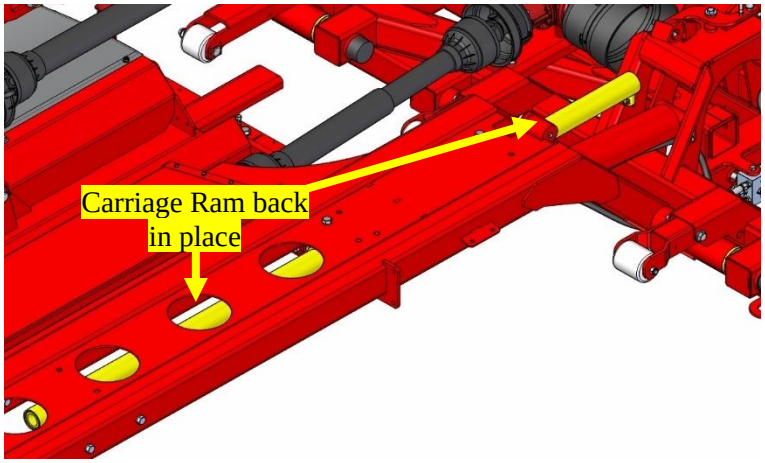

Offer up the repaired Outrigger Carriage Ram back to the X-WAM in its original position in the Outrigger Arm as shown in **YELLOW**.

Note:
The Ram is long and heavy, a two-man lift or suitable Load Rated Lifting Equipment is recommended for this operation!

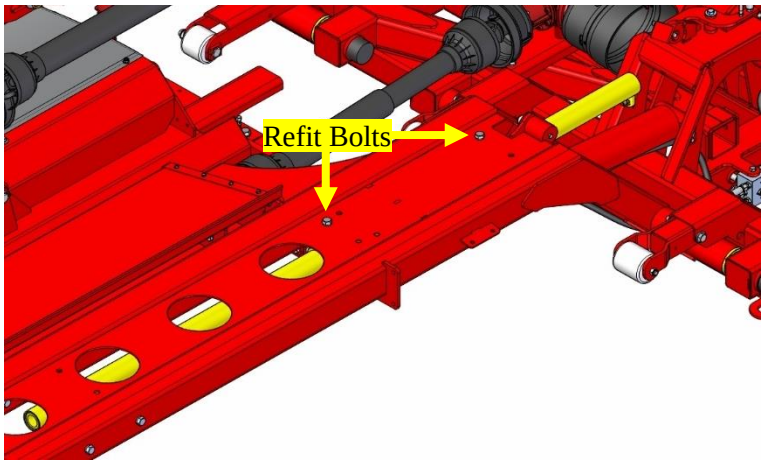

Secure the Ram Spear in place using M16 x 35 Bolts and M16 Heavy Flat Washers.

MEDIUM STRENGTH THREAD LOCKER is used on the threads of the Bolts.

DO NOT fully tighten the Bolts at this stage.

Refit the Hydraulic Hoses to their original locations.

The Hose **(409-000-046)** with the **BLUE** Cable Tie is fitted to the Spear End Port**.**

The Hose **(409-000-047)** with the **GREEN** Cable Tie is fitted to the Cylinder End Port.

Tighten to secure.

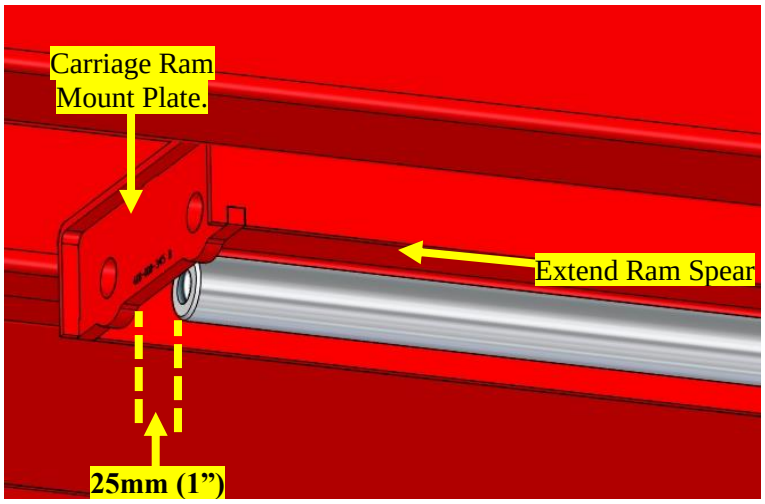

Use the Tractor Hydraulics to carefully extend the Ram Spear so that it is around **25mm (1")** from the Carriage Ram Mount Plate.

Temporarily fit the 7/8 x 4.5" UNF Set Screw **(450-000-106)** through the Carriage Ram Mount Plate into the Ram Spear as shown in **YELLOW**.

Wind this in until it contacts the Carriage Ram Mount Plate.

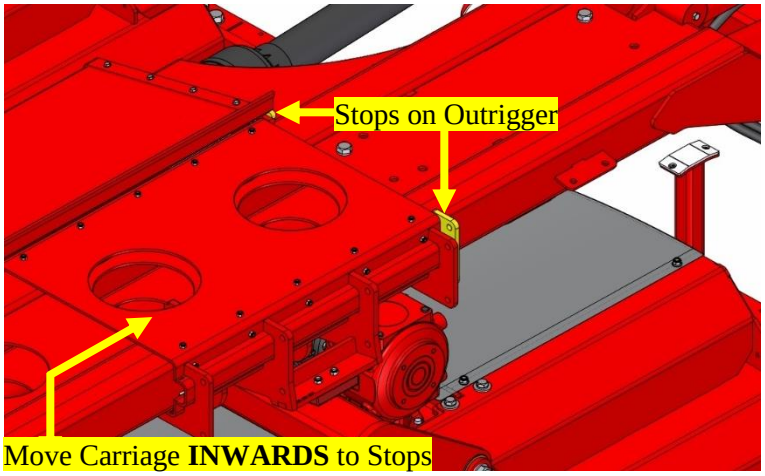

Use the Tractor Hydraulics to retract the Outrigger Carriage **INWARDS** towards the X-WAM Chassis until it **JUST** contacts its Stops present on the sides of the Outrigger Arm.

DO NOT attempt to retract the Carriage Ram Completely at this stage!

Note:
Use caution during this step, the Carriage creates a **SHEAR POINT** as it is moves along the Outrigger Arm

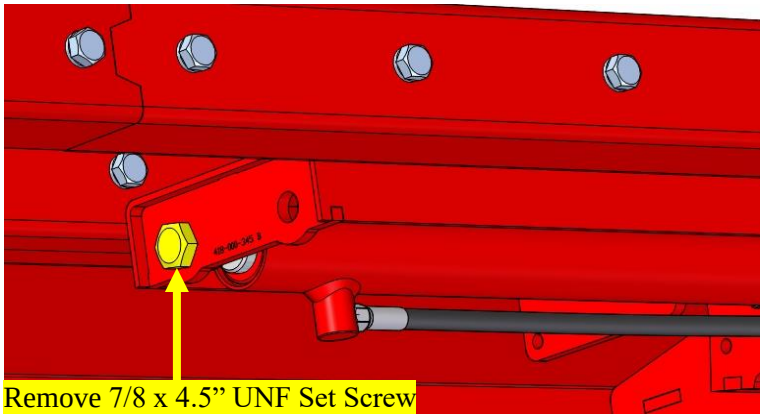

Once the Outrigger Carriage has **JUST** contacted its Stops, remove the 7/8 x 4.5" UNF Set Screw **(450-000-106)** from the Ram Spear.

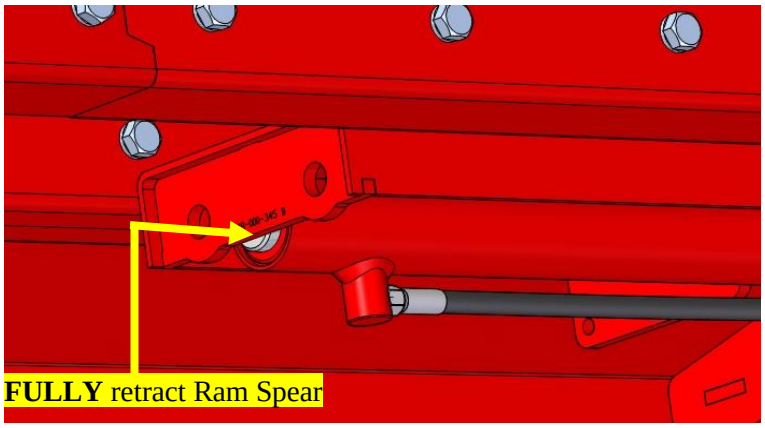

Once the 7/8 x 4.5” UNF Set Screw **(450-000-106)** has been removed, use the Tractor Hydraulics to **FULLY** retract the Carriage Ram.

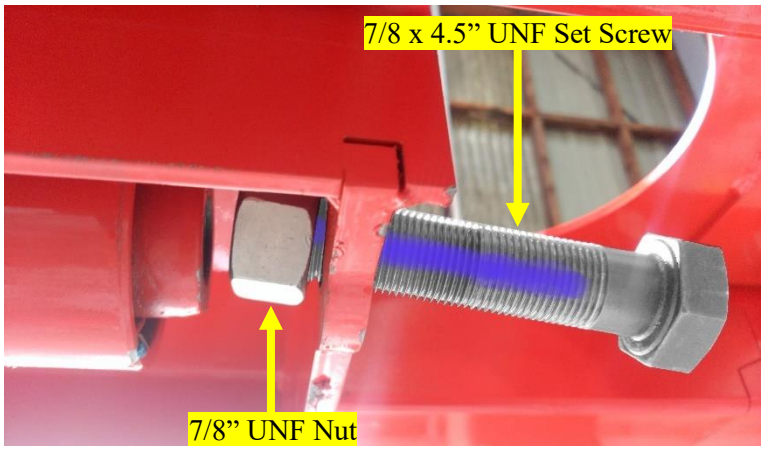

Apply **MEDIUM STRENGTH THREAD LOCKER** as shown to the 7/8 x 4.5” UNF Set Screw **(450-000-106)**.

Fit the Bolt through the Carriage Ram Mount Plate as shown. Fit the 7/8” UNF Nut **(450-000-107)** to the Set Screw as shown.

Note:
Trimax Mowing Systems recommends that the Ram Spear Fasteners are replaced when replacing the Ram Spear!

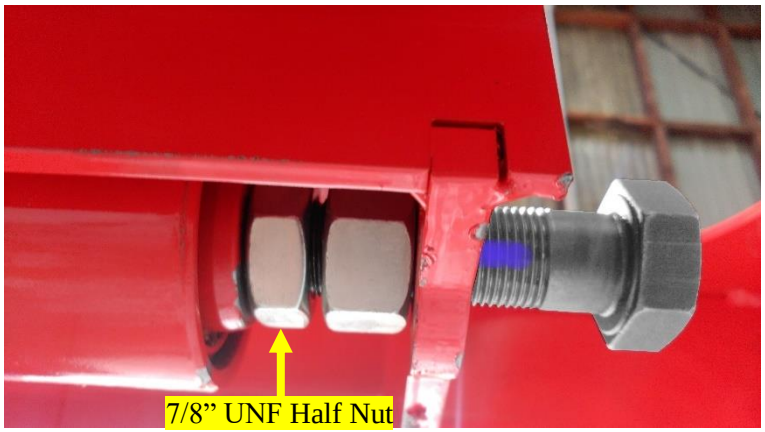

Fit the 7.8” UNF Half Nut **(107-114-023)** to the 7/8 x 4.5” UNF Set Screw **(450-000-106)**.

Wind the 7/8 x 4.5” UNF Set Screw into the Ram Spear as shown.

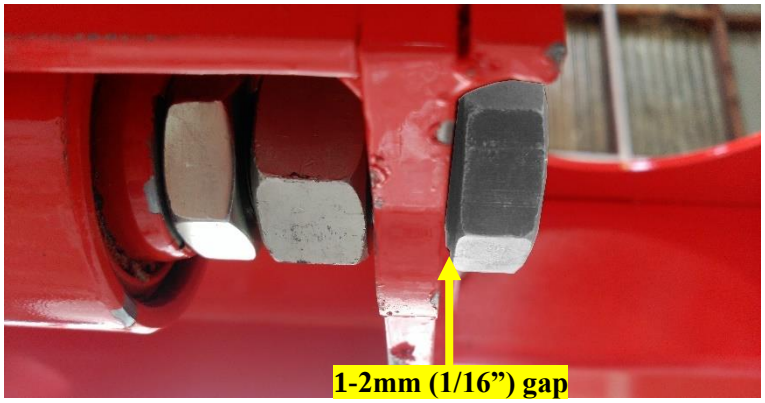

Whilst keeping the Nuts stationary, wind the 7/8 x 4.5” UNF Set Screw in until there is a **1-2mm (1/16”)** gap between the head of the 7/8 x 4.5” UNF Set Screw and the Carriage Ram Mount Plate.

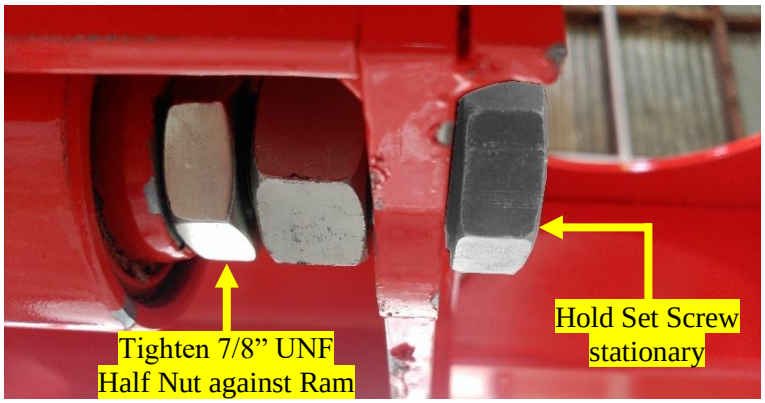

Once the above clearance is achieved, hold the 7/8 x 4.5" UNF Set Screw stationary, then lock the 7.8" UNF Half Nut **HARD** against the end of the Ram Spear.

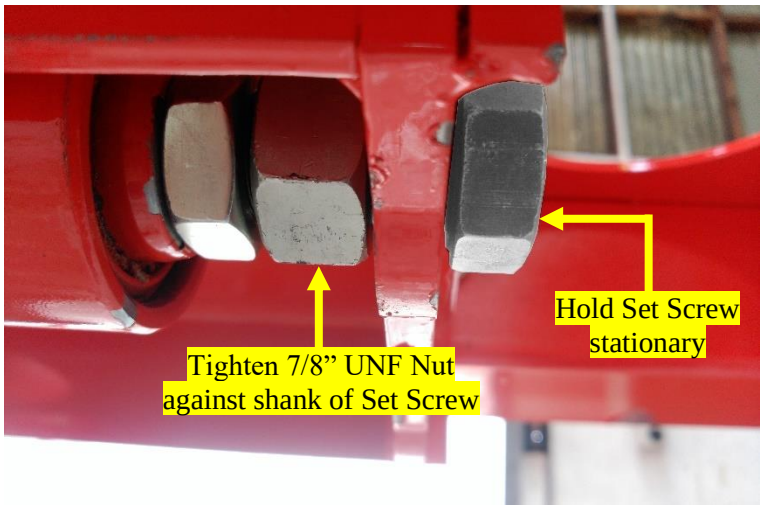

Hold the 7/8 x 4.5" UNF Set Screw stationary and fully tighten the 7/8" UNF Nut against the shank of the 7/8 x 4.5" UNF Set Screw.

Note:
This Bolt and Set Screw will **NOT** clamp against the Carriage Ram Mount Plate, this is **INTENTIONAL** as this Set Screw needs to be able to float slightly when in operation.
This to allow for the twisting motion and slight flexing of the Ram Spear when extending and retracting the Mowing Decks!

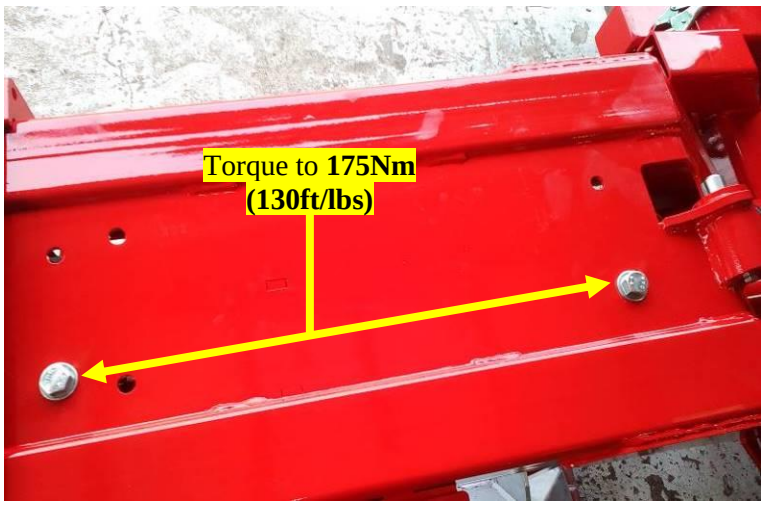

Torque the M16 x 35 Carriage Ram Mounting Bolts to **175Nm (130ft/lbs).**

IMPORTANT:
Test the hydraulic system by extending and retracting the Mowing Deck a couple of times as per the instruction in your Operators Manual.

	This process is now complete.