trimax MOWING SYSTEMS	SPARE PARTS INSTRUCTIONS # 94
Date Created: 09/03/2021	**Product:** Warlord S1/S2/S3
Title: Extension Shaft Removal & Bearing Replacement	

SAFETY! Before attempting to make any adjustments or carry out maintenance on the mower, review the hazard identification table (section 3a of your Operator Manual) and take all necessary precautions.

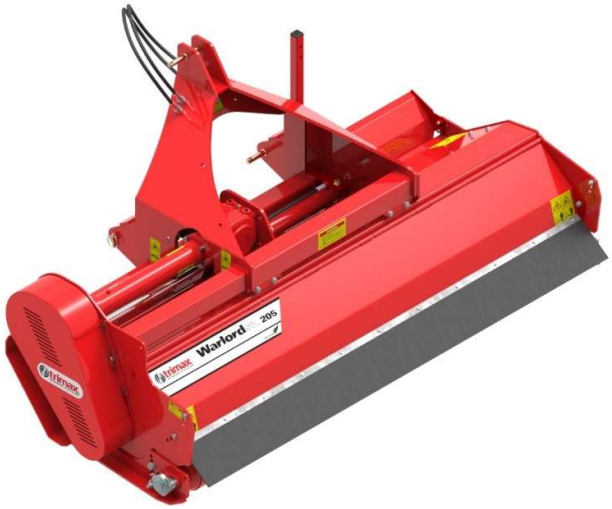

A Warlord S3 205 Right Hand Offset is shown throughout this procedure.

The same process applies to Warlord S1,2 & 3 of any size in either Left Hand or Right Hand configurations.

Note:
Take note of the original fastener and pulley positions **BEFORE** disassembly as these may differ slightly between models!

See your Spare Parts Listing for detail.

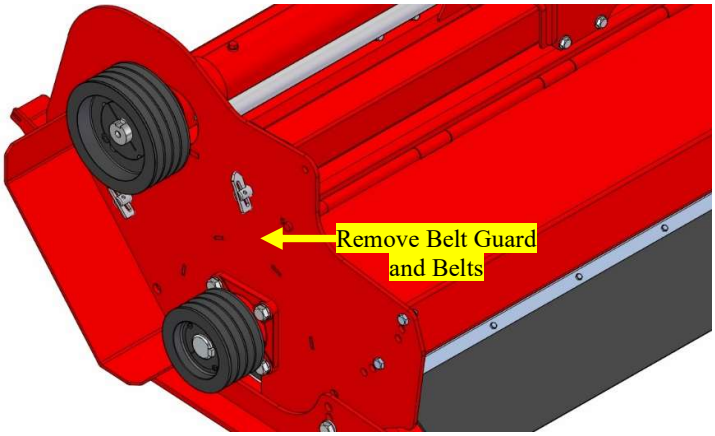

Remove the Belt Guard as per the Operators Manual.

Remove the Belts as per the Operators Manual.

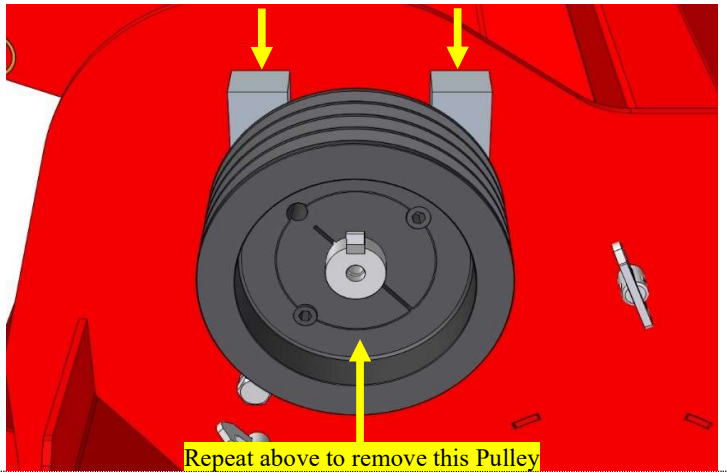

Remove the Gearbox Extension Shaft Pulley and Taper Lock Bush. Use the process as shown for the Rotor Pulley in the following steps, but **DO NOT** remove the Rotor Pulley itself

Note:
Two **30mm (1 3/16")** thick Spacers may need to be placed between the Pulley and the Mower Body to assist in driving the Taper Lock Bush off.

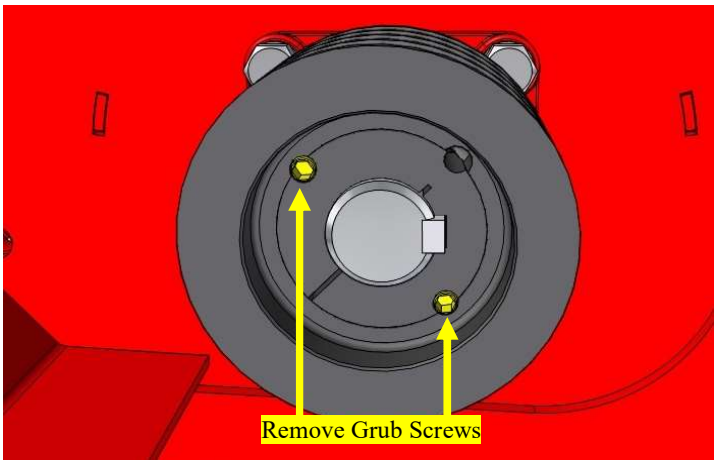

At the Pulley, remove the two Grub Screws shown.

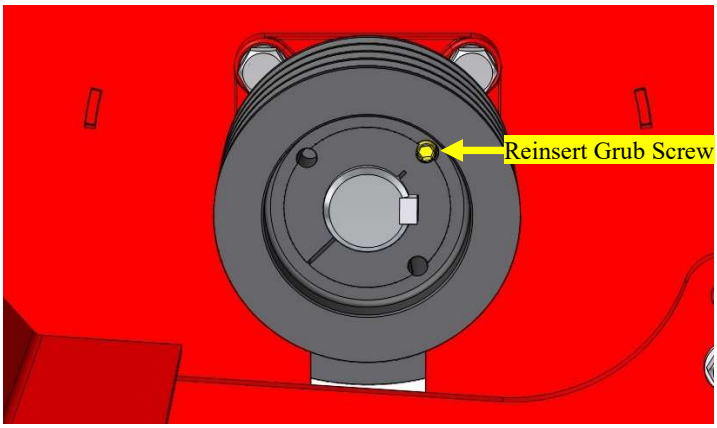

Reinsert one Grub Screw into the unused hole in the Pulley.

Gradually tighten this Grub Screw.

As it is tightened, the Grub Screw will drive against the Pulley and begin to force the Taper Lock Bush off the Shaft.

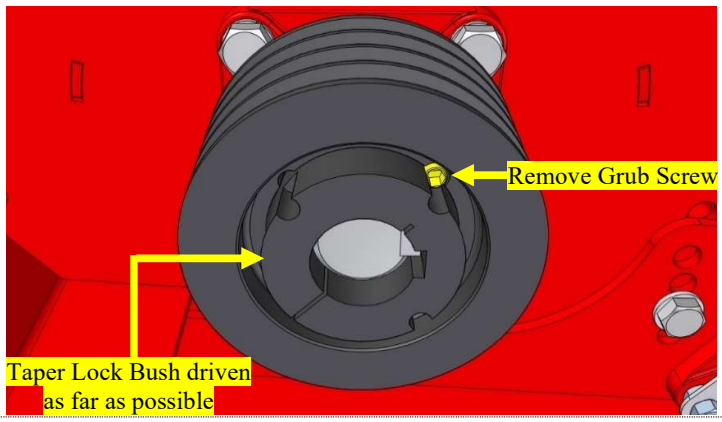

Once the Taper Lock Bush has been driven off as far as possible, remove the Grub Screw.

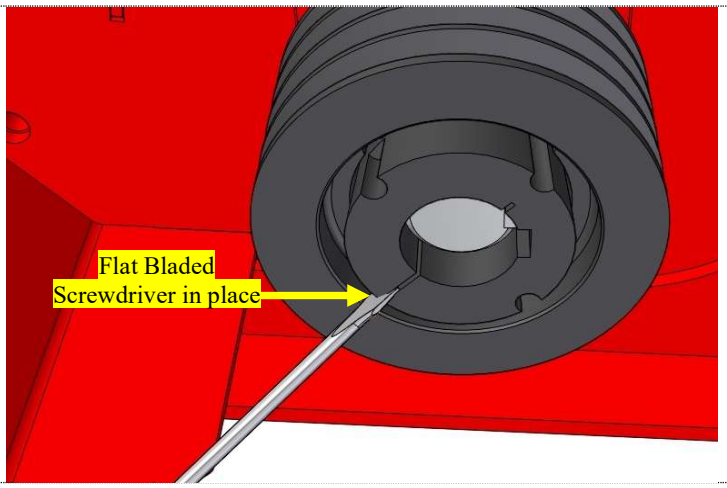

Insert a Flat Bladed Screwdriver into the Slot opposite the Removal Hole as shown.

Use this to lever the Taperlock Bush open slightly.

Slide the Taper Lock Bush off the Rotor Stub.

Note:
USE CAUTION, apply the absolute **MINIMUM** amount of leverage to slide the Bush off!
If too much leverage is applied, the bush may fracture through its thinnest point!

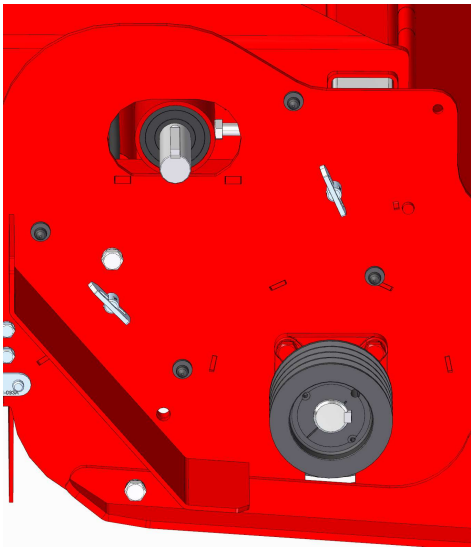

Remove the Pulley from the Shaft.

Place the Pulley Components to one side.

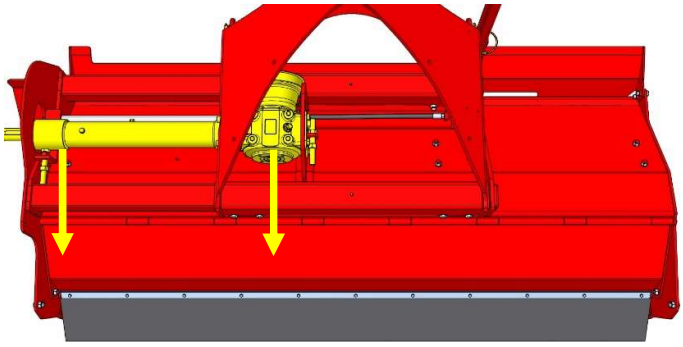

Using the Gearbox and Extension Adjusters, position the Gearbox Assembly as far towards the **REAR** of the Mower Body as possible as highlighted.

Note:
The process for moving the Gearbox Assembly is covered in **Section 14d** in your Operator Manual.

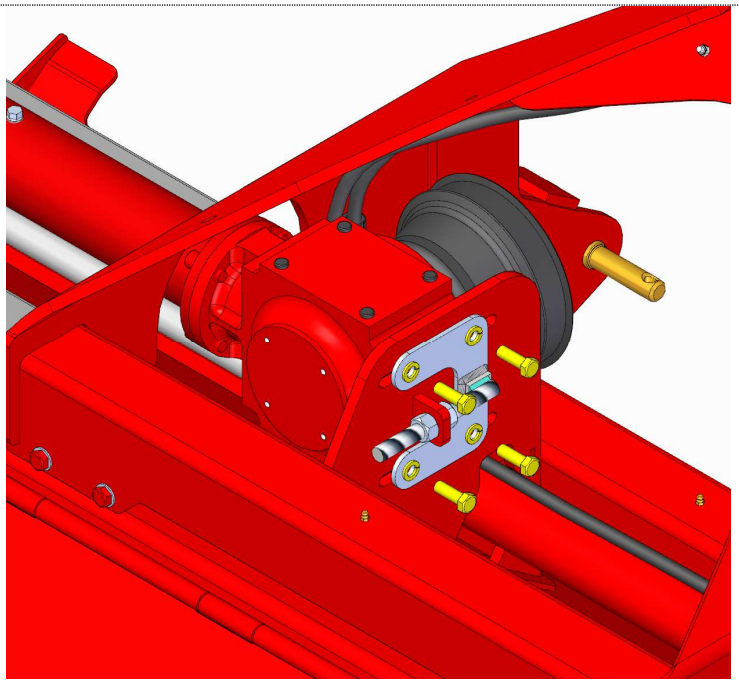

Remove the four M12 bolts & washers securing the Gearbox to the Mower Body.

Then remove the M16 Gearbox Adjuster Nut

Note:

USE CAUTION, when the M12 Bolts are removed the Gearbox and Extension Shaft assembly will drop and should be adequately supported to prevent damage.

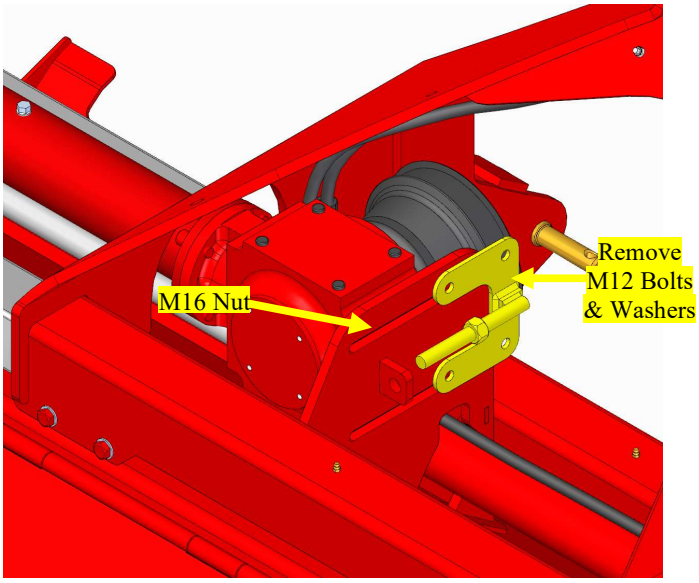

Remove the Gearbox Adjuster Mounting Plate and set aside with the fasteners.

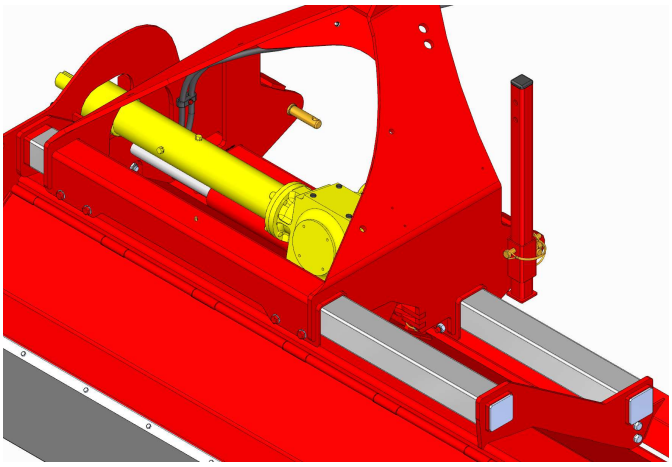

Operate the Side Shift Hydraulic Cylinder to move the Headstock to the Driveline end of the mower.

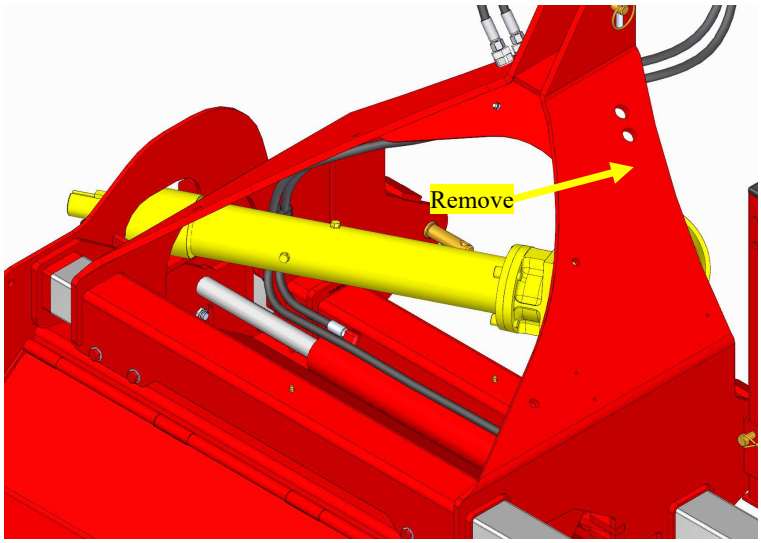

Rotate the Gearbox and Extension Shaft assembly and remove through the front of the Mower Headstock.

Note:

USE CAUTION, when removing the Gearbox and Extension shaft due to the weight, use 2 people to move it.

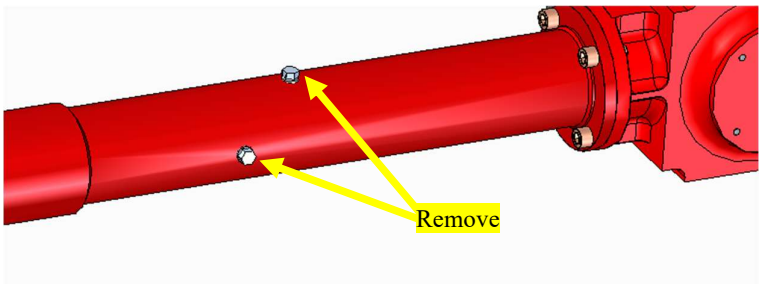

Prepare an oil pan underneath the bungs on the extension shaft. Remove both bungs and drain all oil inside the extension shaft, allowing it to drain into the oil pan.

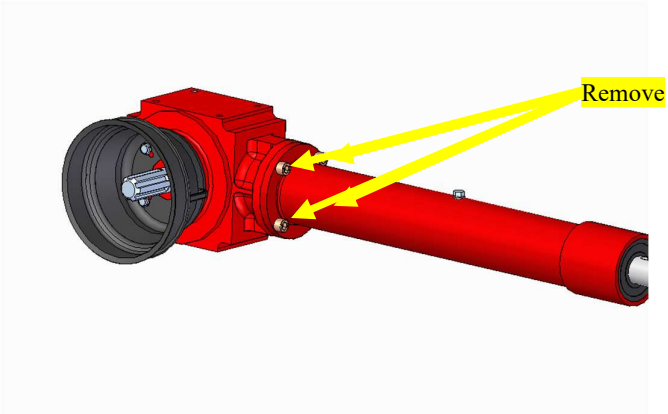

Remove the 4x M12 Cap Head Bolts and remove the gear box.

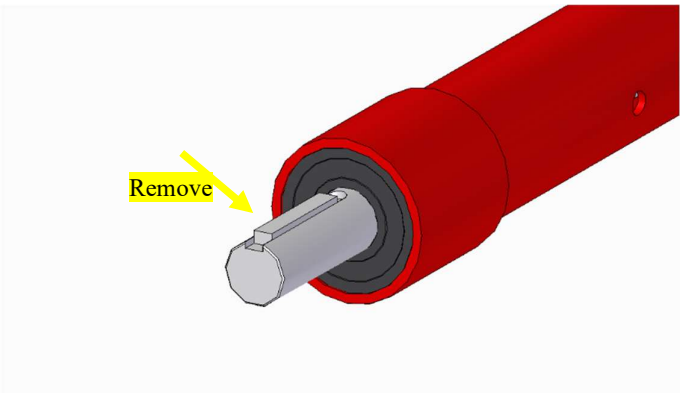

Remove the shaft key. If the key is not loose, use a hammer and wedge/chisel to knock it out.

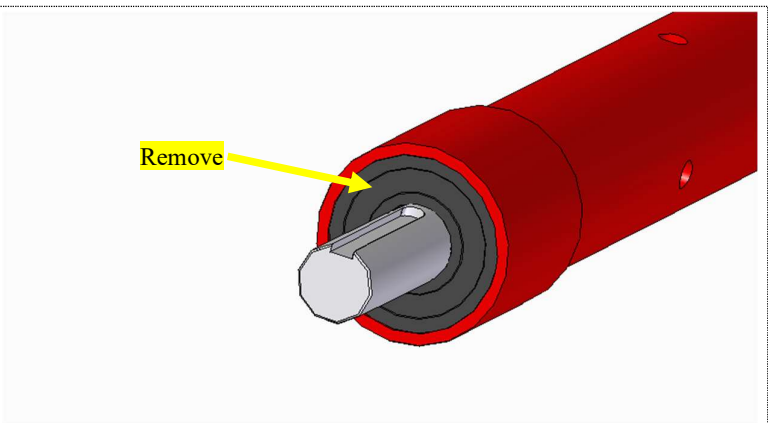	Remove the rubber seal on the end of the extension shaft by using a flat head screwdriver to pry it out gently.
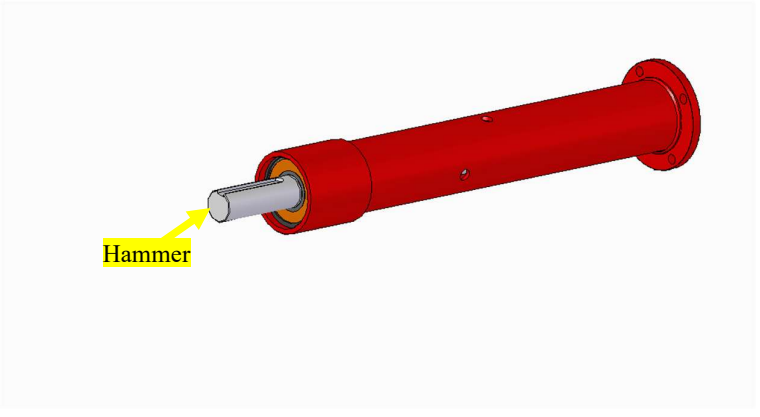	Use a rubber mallet to knock the shaft out of housing cylinder
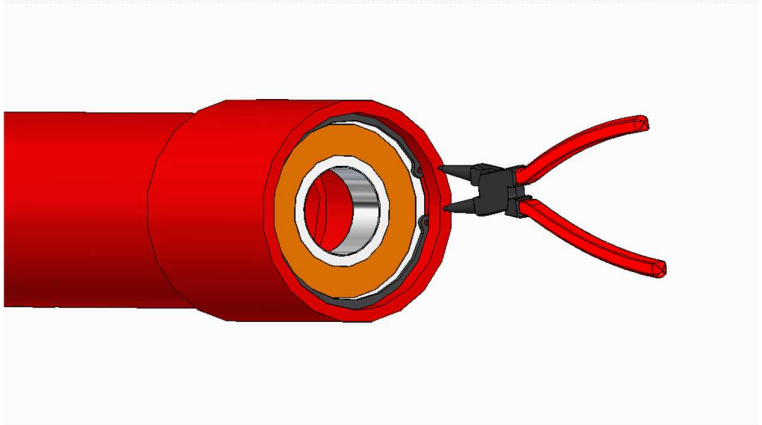	Use circlip pliers to remove the circlip from inside of the cyclinder.
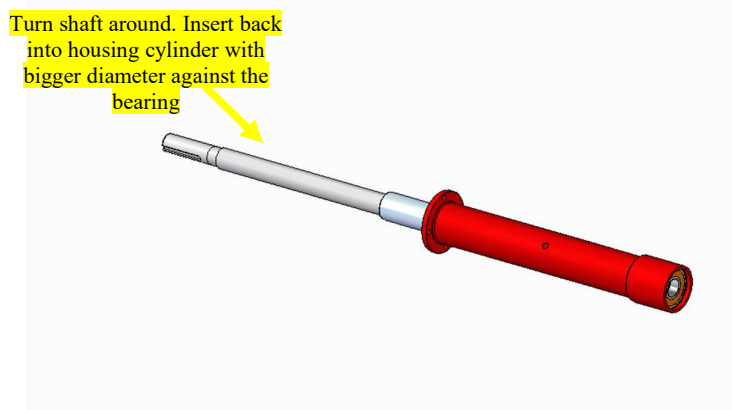	With the interior shaft against the bearing, use a hammer to knock the bearing out of the housing.

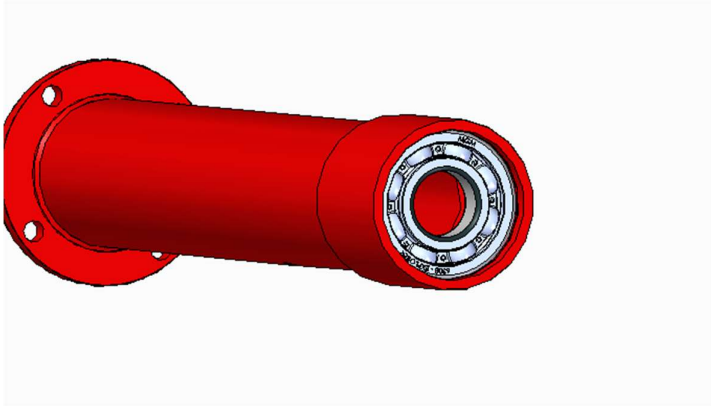	Insert the new bearing with a hammer and a drift until it hits the lip of metal behind the bearing.
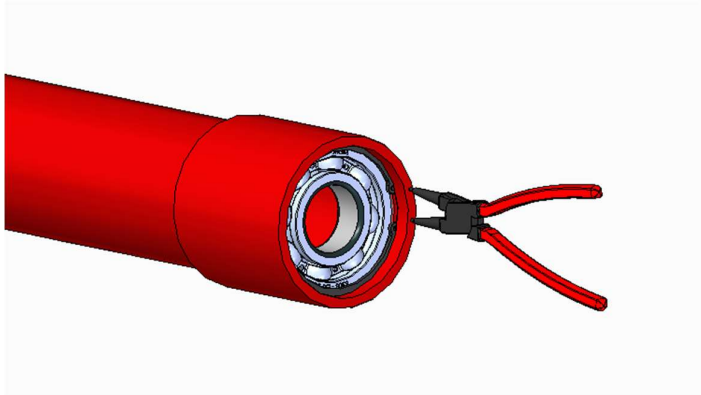	Use the circlip plyers to insert the circlip back into the bearing housing.
	Insert the interior shaft using a rubber mallet to hammer it into position.
	 Lubricate the internal face of the rubber seal then insert the rubber seal by slipping it over the shaft and applying even pressure until it is in place. Insert the shaft key into place.

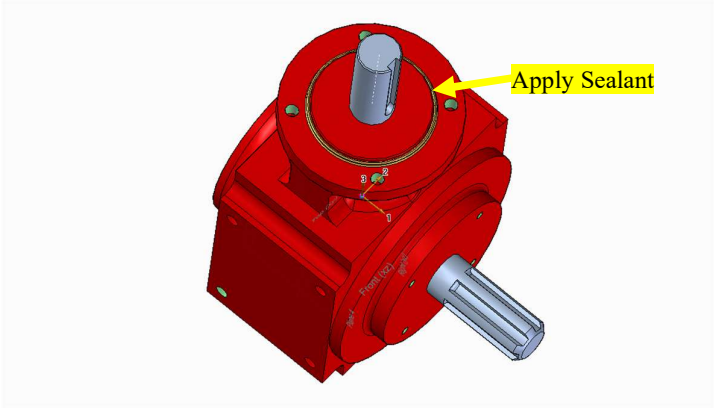	Apply sealant onto the gear box as shown.
	Apply Loctite **243** to each 4x M12 cap head bolts to attach the gearbox back onto the extention shaft.
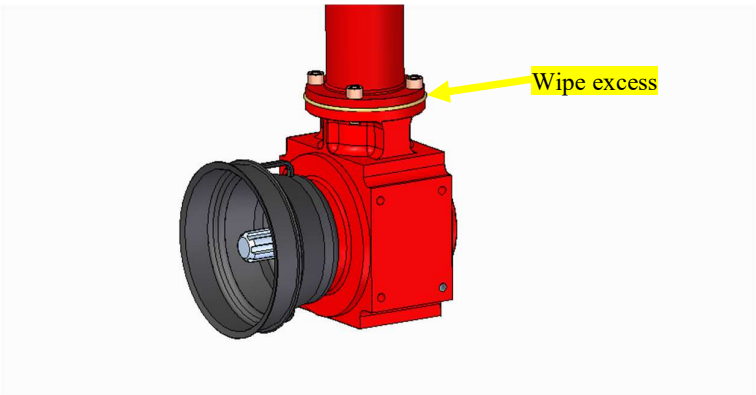	Wipe away any excess sealant
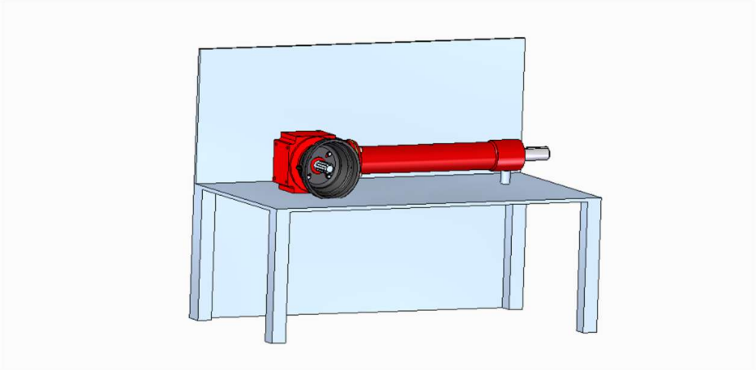	Position the assembly as shown. **Note:** Support the extension shaft to ensure it is level Ensure the Bung positions are correct

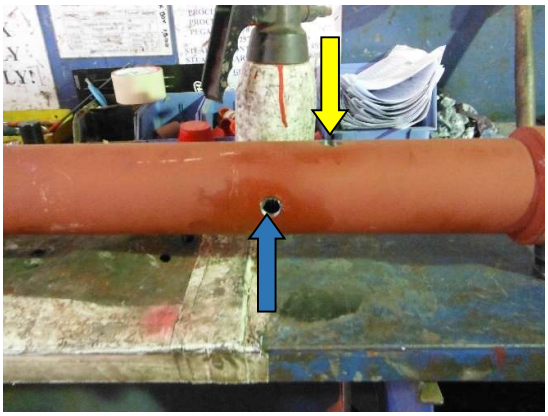	Fill in the top (white arrow) Using grade EPX 80w-90 oil, pour in the fill hole at the top (Yellow Arrow) until oil just starts to weep out of the side hole (Blue Arrow). **Note:** Rotate the unit slightly so both holes are facing upwards and ensure both holes are clear of any grease.
	Apply Loctite **567** to both bungs.
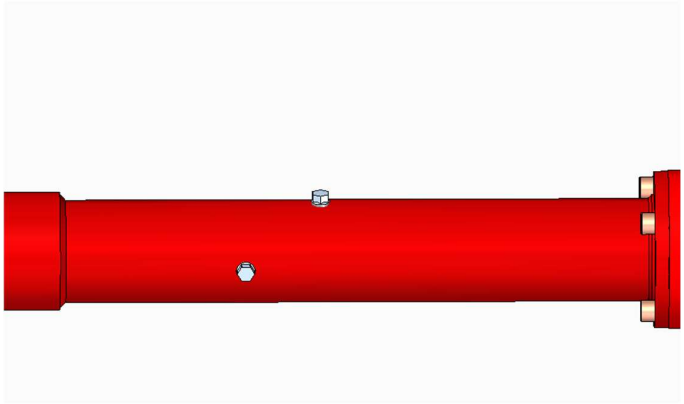	Refit the bungs. Fully tighten
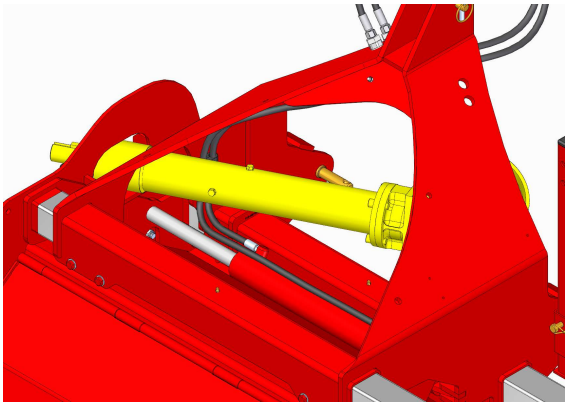	Manoeuver the gearbox and extension shaft into position.

Position the backing plate **(417-000-428)** as shown.

Secure to the gear gearbox using M12 x 35 Bolts and M12 Spring Washers.

Position M16 Plain Nuts as shown.

Note:
The highlighted M16 Nut needs to be fitted to the backing plate prior to being fitted to the Gearbox!

Move the Headstock unit into position and move over until fitted correctly.

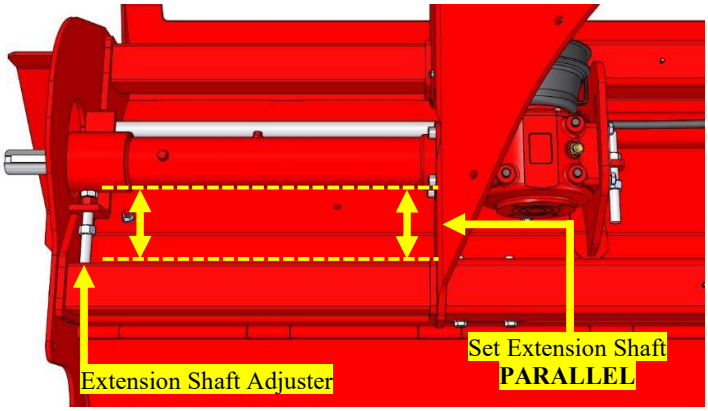

Adjust the position of the Extension Shaft Adjuster so that the Extension Shaft is running **PARALLEL** with the Mower Body.

Note:
It is **CRITICAL** that the Extension Shaft is **PARALLEL** to the Body when fitting the Pulleys! This is to ensure the correct alignment of **BOTH** the Rotor and Gearbox Extension Pulleys!

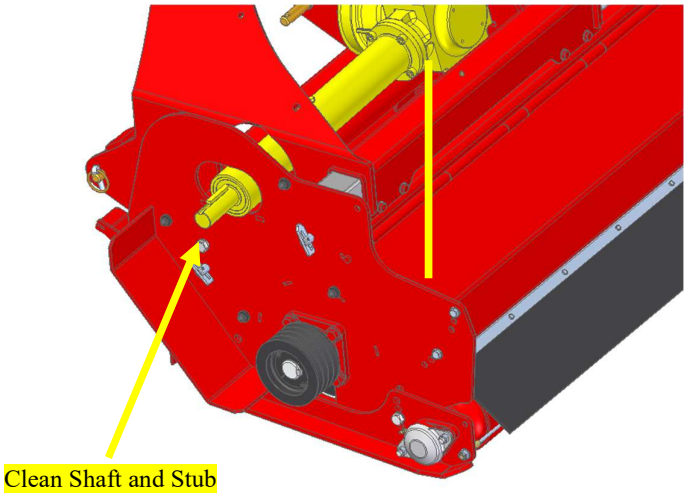

Once in this position, clean **BOTH** the Rotor Stub and Extension Shaft with White Spirits and a Clean Rag to remove any contaminants.

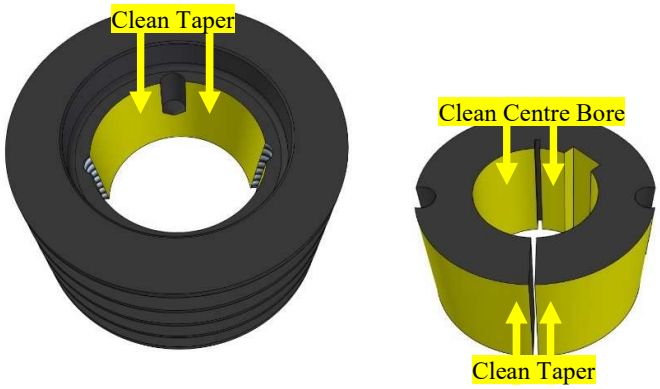

Clean the taper bore in the centre of **BOTH** Pulleys using White Spirits and a Clean Rag to remove any contaminants.

Clean the external taper and the centre bore of **BOTH** Taper Lock Bushes using White Spirits and a Clean Rag to remove any contaminants.

One of each shown opposite.

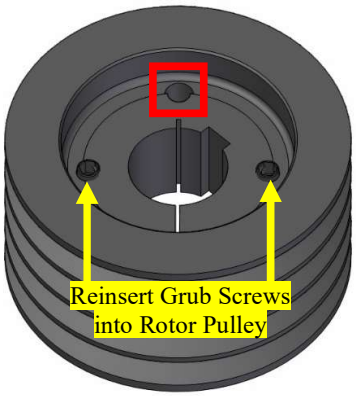

Apply Loctite 243 - Medium Strength Thread Locking Compound to each of the Grub Screws.

Insert the Taper Lock Bush **(402-060-730)** into the Rotor Pulley **(403-361-180)**

Align the holes as shown.

Fit the Grub Screws loosely using the Holes shown.

Note:
DO NOT place a Grub Screw in the location highlighted **RED**, this is only used for pulley removal!

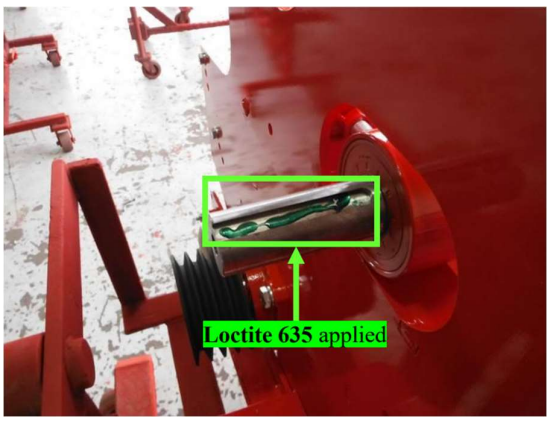

Apply a coating of Loctite 635 to the keyway located in the Extension Shaft.

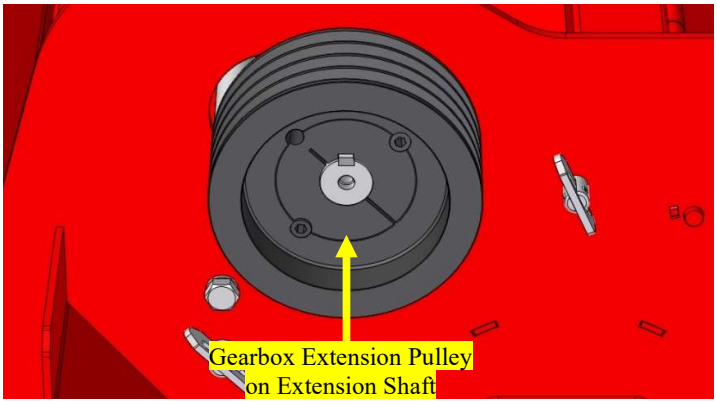

Align the keyway in the Taper Lock Bush with the Key fitted to the Extension Shaft.

Slide/lightly tap the Gearbox Extension Pulley onto the Extension Shaft until the Taper Lock Bush is approximately flush with the end of the Extension Shaft.

Note:
The final position of this Pulley is determined by the position of the Rotor Pulley.

Using a hexagon wrench, nip up the grub screws gradually and alternately.

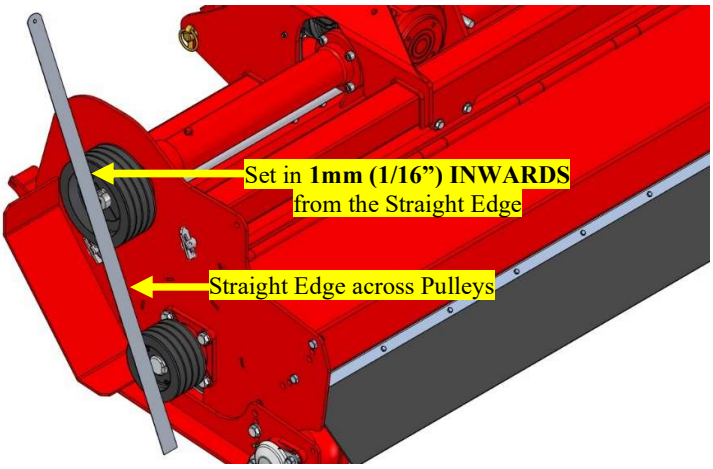

Check the Pulley alignment using a Long Straight Edge from the Rotor Pulley. Ensure that the Straight Edge is positioned as shown opposite.

Adjust the position of the Gearbox Extension Pulley so it is approximately **1mm (1/16”) INWARDS** towards the gearbox from the Straight Edge.

Very lightly nip up the Grub Screws.

Note:
The Extension Shaft Pulley will pull **OUTWARDS** when tightened! It is **CRITICAL** these Pulleys are aligned correctly, otherwise premature Drive failure may occur!

Using a Hammer and a suitible Drift, tap around the Taper Lock Bush.

Re-torque the Grub Screws to **90Nm (66ft/lbs)**

REPEAT THIS STEP THREE TIMES.

Note:
This will ensure that the Taper Lock Bush is seated square in the taper bore of the Rotor Pulley and is secured correctly!

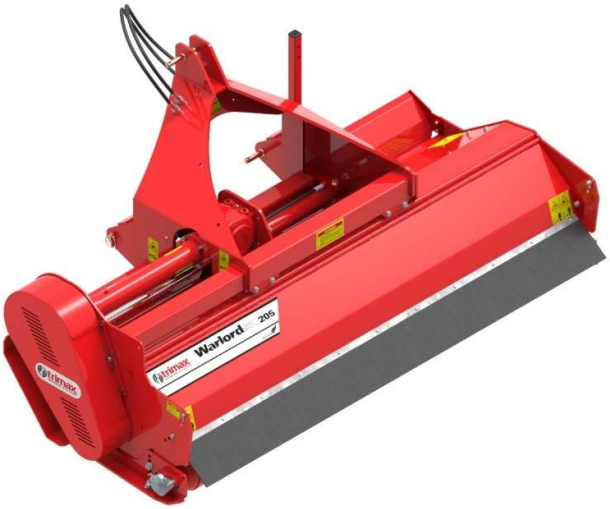	Fit and tension the Drive Belts as detailed in your Operator Manual. Fit the Belt Guard as detailed in your Operator Manual.
trimax MOWING SYSTEMS	This Fitment process is now complete.