trimax MOWING SYSTEMS	SPARE PARTS INSTRUCTIONS # 3
Date Created: 09/10/15	**Product:** Stealth S3
Title: Service Stands Kit Fitment	**Part Number:** 802-000-006

SAFETY! Before attempting to make any adjustments or carry out maintenance on the mower, review the hazard identification table (section 3a of your Operator Manual) and take all necessary precautions.

Tools Required	Quantity	Area Used
Flat Screw Driver	1	Removing Blanking Plugs
16mm Socket	1	Storage Bracket Mounting
18mm Socket	1	Storage Bracket Mounting
24mm Socket	1	Service Stand Mounting
Ratchet	1	Used with Sockets
Extension	1	Used with Sockets
24mm ROE Spanner	1	Service Stand Mounting

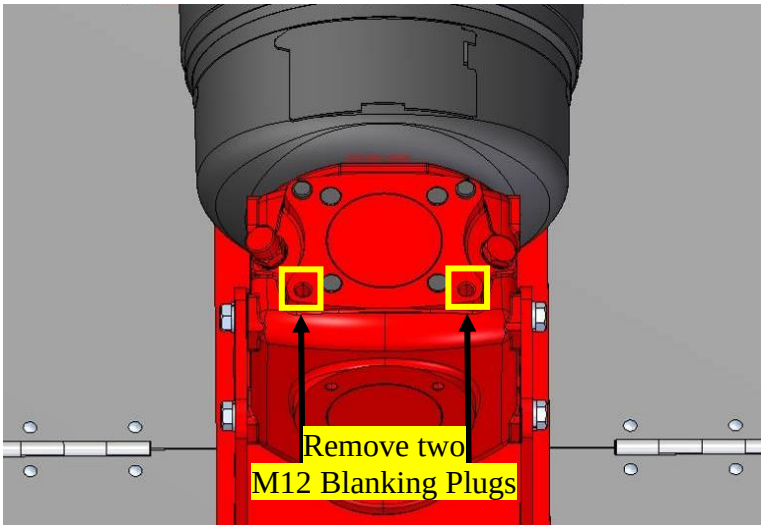

Use a Flat Screwdriver to remove the two M12 Blanking plugs from the top of the Gearbox.

Discard once removed.

Note:
This is to clear the area required for fitment of the Service Stands Kit.

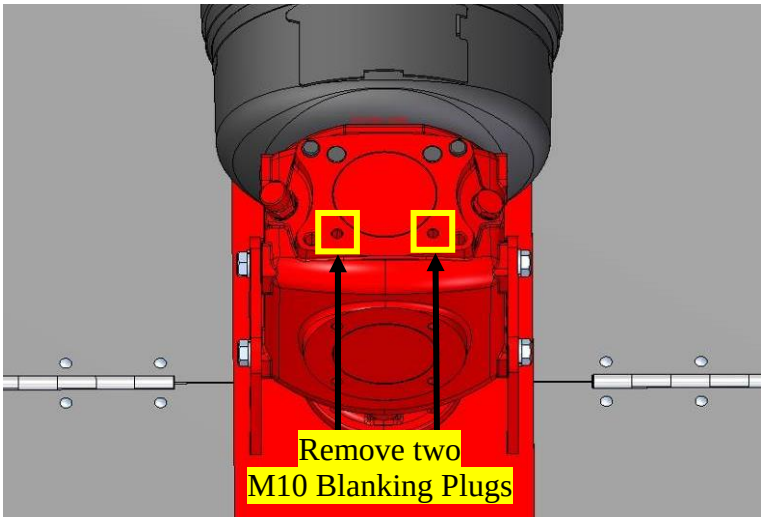

Use a Flat Screwdriver to remove the two M10 Blanking plugs from the top of the Gearbox.

Discard once removed.

Note:
This is to clear the area required for fitment of the Service Stands Kit.

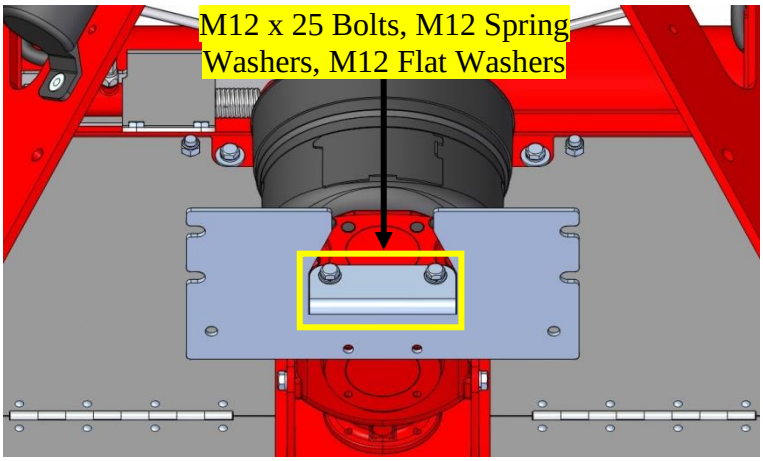

Offer up the Service Stand Storage Bracket (**417-001-191**) to the rear of the Gearbox.

Secure the top two positions shown using M12 x 25 Bolts, M12 Spring Washers and M12 Flat washers.

Hand tight only at this stage!

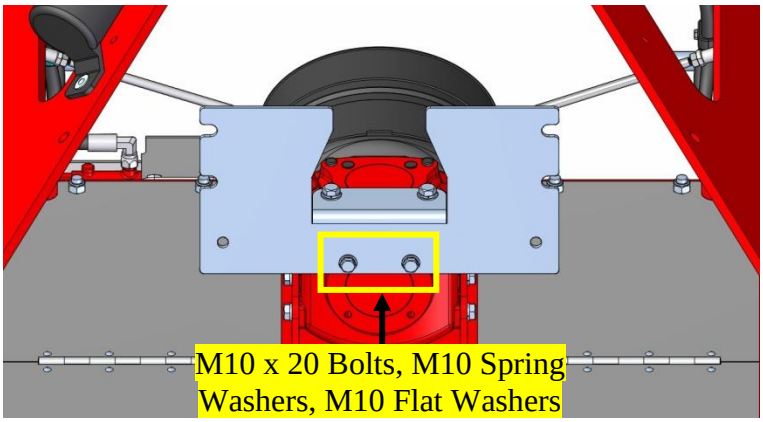

Secure the lower two positions shown with M10 x 20 Bolts, M10 Spring Washers and M10 Flat Washers.

Hand tight only at this stage!

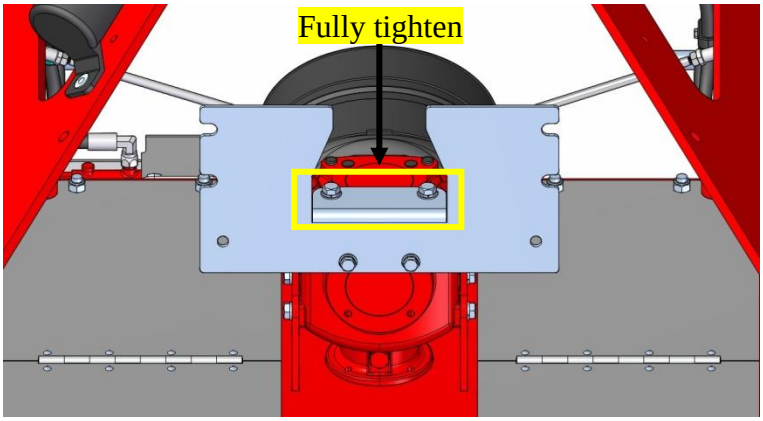

Fully tighten the Upper Mounting Bolts using an 18mm Socket, Extension and Ratchet.

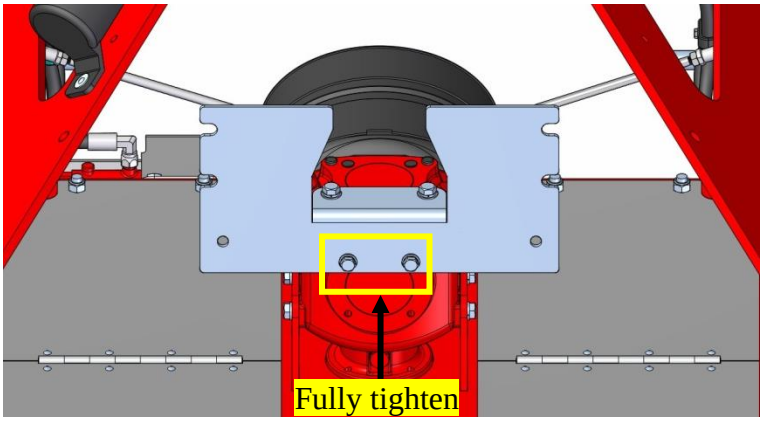

Fully tighten the Lower Mounting Bolts using a 16mm Socket, Extension and Ratchet.

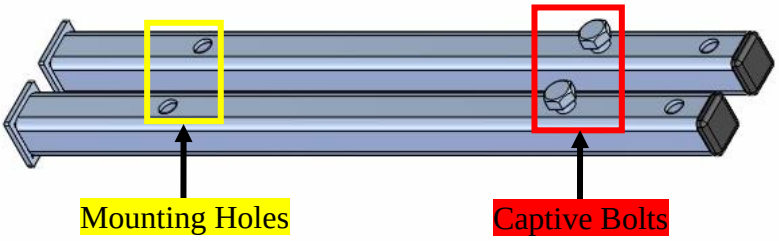

Gather the two Service Stands.

The **RED** highlight shows the captive Bolts.

The **YELLOW** highlight shows the holes used for mounting to the Storage Bracket.

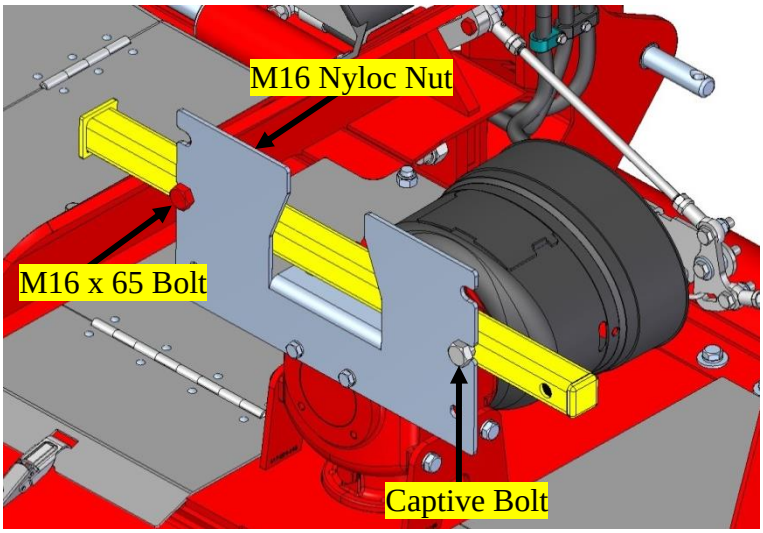

Offer up a Service Stand to the **FRONT** side of the Storage Bracket as shown in **YELLOW**.

Fit the Captive Bolt into the slot at one end of the Storage Bracket.

Secure the Service Stand to the Storage Bracket by Fitting an M16 x 65 bolt through the Service Stand and the Storage Bracket.

Fit an M16 Nyloc from the **FRONT** side.

Fully tighten.

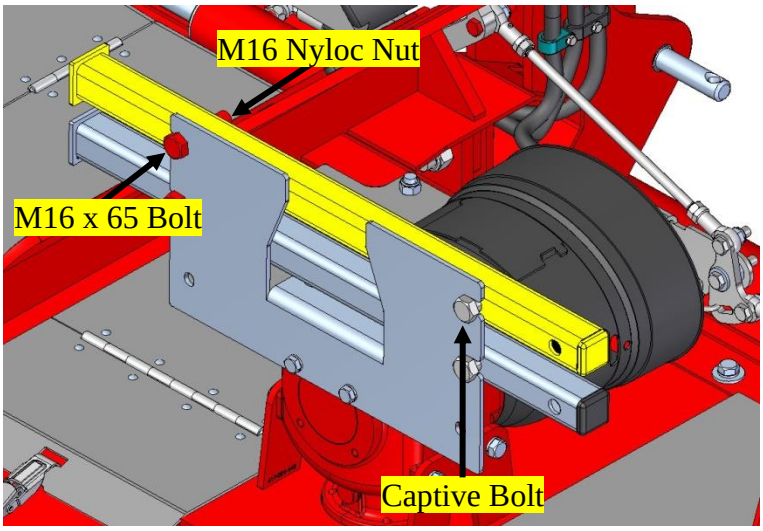

Offer up the second Service Stand to the **FRONT** side of the Storage Bracket as shown in **YELLOW**.

Fit the Captive Bolt into the slot at one end of the Storage Bracket.

Secure the Service Stand to the Storage Bracket by Fitting an M16 x 65 bolt through the Service Stand and the Storage Bracket.

Fit an M16 Nyloc from the **FRONT** side.

Fully tighten.

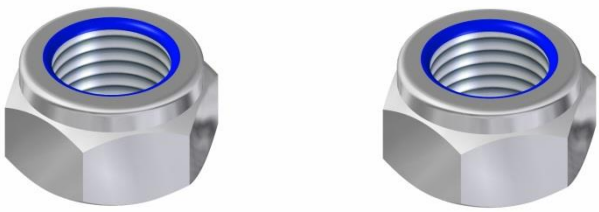

<u>Note:</u>
There will be two M12 Nyloc Nuts left over.

These are only to be used when fitting **BOTH** the Service Stands Kit (**802-000-006**) and the Safety and Storage Kit (**802-000-007**) to the same Stealth S3.

trimax MOWING SYSTEMS	This Fitment process is now complete