SPARE PARTS INSTRUCTIONS # 48

Date Created: 20/04/2017 | **Product:** Stealth S3

Title: Gearbox removal and replacement

SAFETY! Before attempting to make any adjustments or carry out maintenance on the mower, review the hazard identification table (section 3a of your Operators Manual) and take all necessary precautions.

Lower the Stealth S3 onto the ground.

Raise the Transport Locks.

Lower the Wings down onto the ground.

Note:
Ensure the Tractor P.T.O is disengaged and the Tractor is turned off!

Remove the P.T.O Shaft connecting the Tractor to the Stealth S3.

Place to one side.

Please see the Operators Manual for further detail if required!

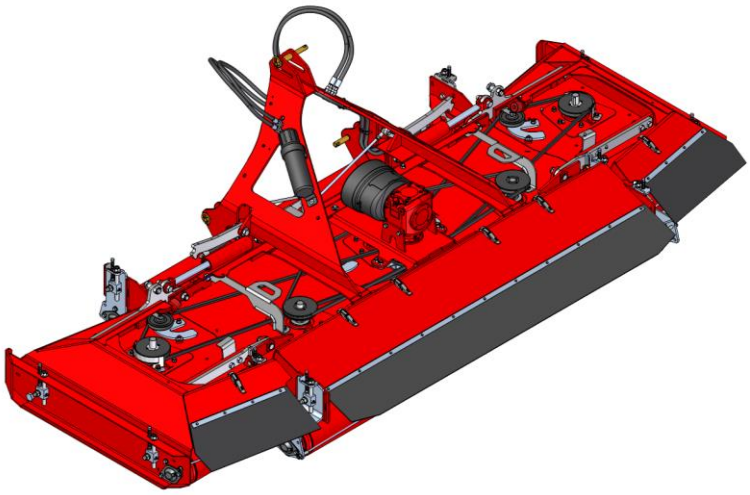

Remove the four M12 Nyloc Nuts used to secure the Centre Covers.

Place these to one side for re-fitment later.

Unlatch **ALL** Covers.

Remove **ALL** Covers and place to one side.

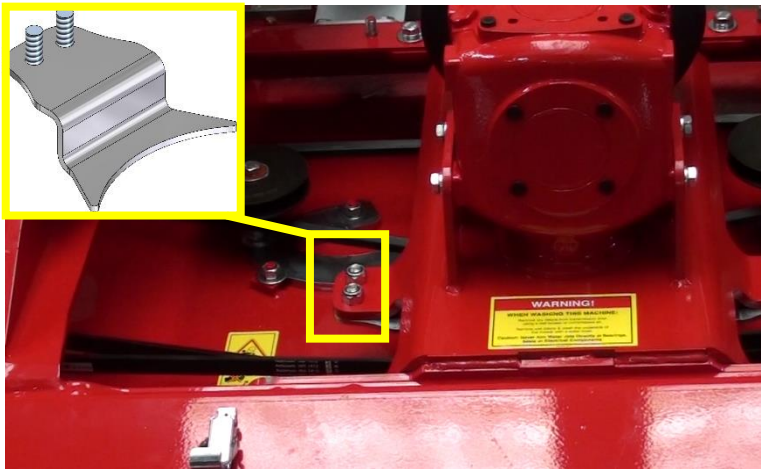

Remove the **SHORT** Left-Hand Gearbox Belt Guide.

Place the M12 Nyloc Nuts and Belt Guide to one side.

Note:
The Left and Right Hand Gearbox Belt Guides are different from each other! See inset for detail!

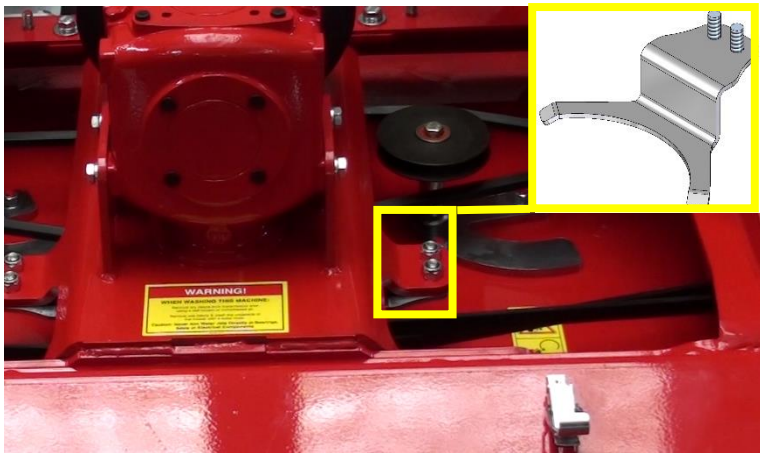

Remove the **TALL** Right-Hand Gearbox Belt Guide.

Place the M12 Nyloc Nuts and Belt Guide to one side.

Note:
The Left and Right Hand Gearbox Belt Guides are different from each other! See inset for detail!

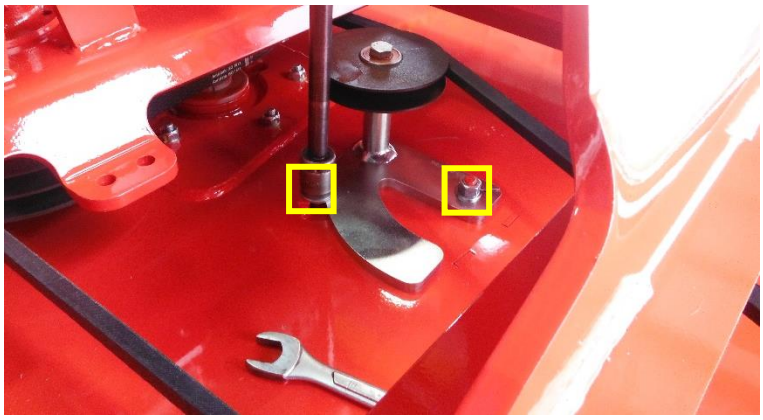

Slacken **ALL** Idler Mounting Nuts.

One Idler shown.

Back the Idlers off to relieve belt tension.

See below for Idler positions.

Note:
DO NOT REMOVE THE IDLER MOUNTING NUTS!

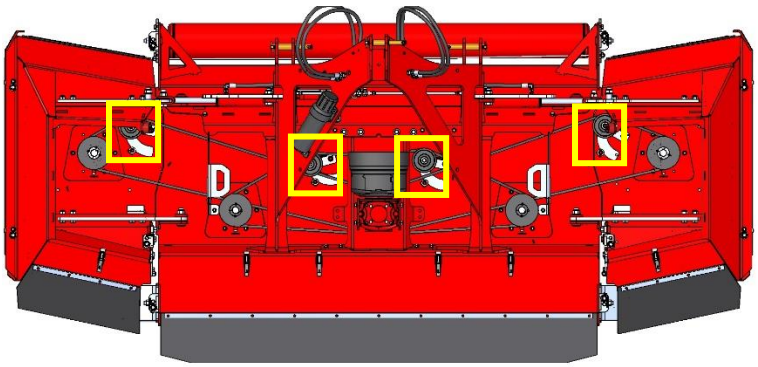

The image opposite shown the four Idler positions.

Take note of the Belt positions on the Gearbox Pulley.

Remove each Belt from around the Gearbox Pulley.

These **DO NOT** have be removed completely, just clear of the Gearbox Pulley is adequate!

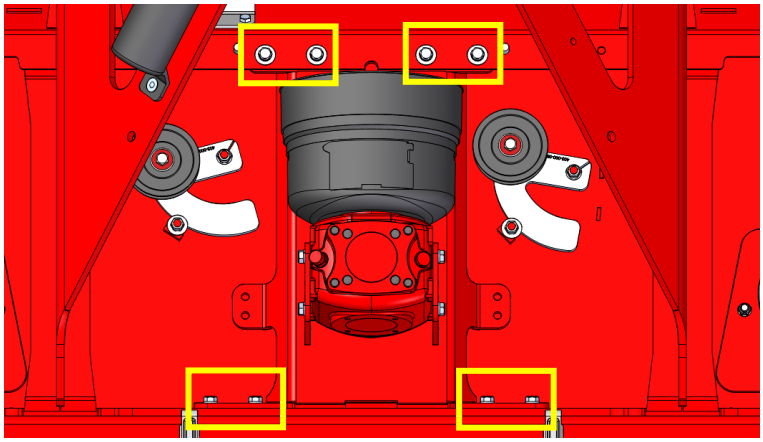

Support the weight of the Gearbox Assembly.

Remove the Front and Rear Fasteners.

Place these to one side.

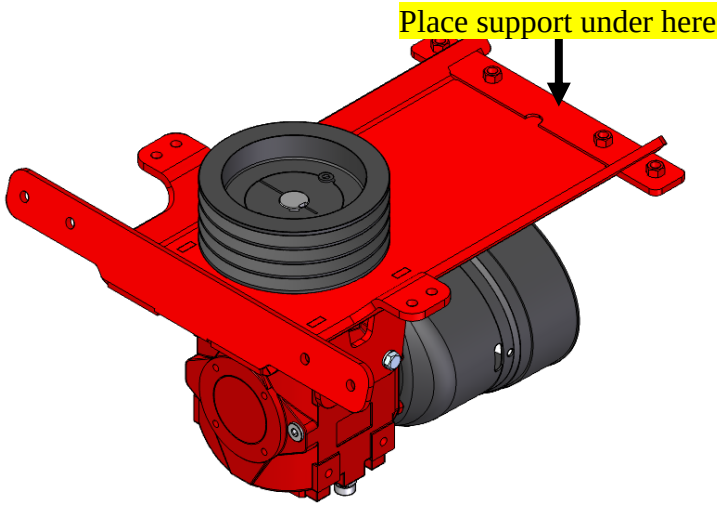

Remove the Gearbox Assembly from the Stealth S3.

Place on a Workbench in the orientation shown.

Note:
A support will need to placed under the **FRONT** of the Gearbox Mount to support as the assembly will become unbalanced once the Pulley is removed!

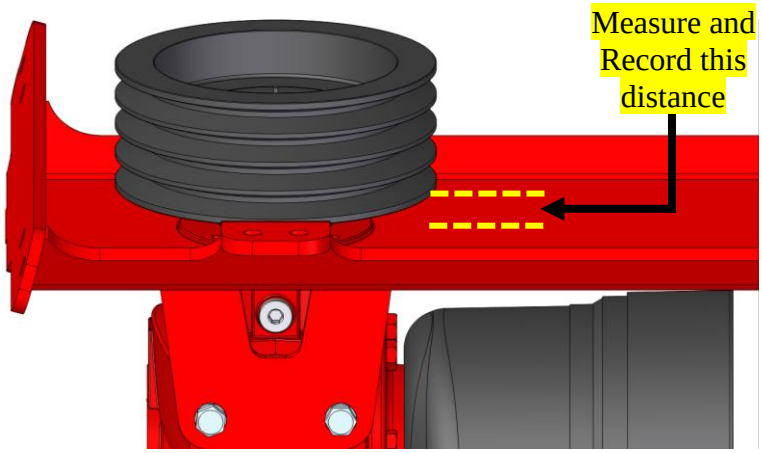

Measure and record the distance shown from the Pulley to the Gearbox Mount.

IMPORTANT:
This is **CRITICAL**, this measurement will be used to set the Pulley back in the **CORRECT** location on installation of the replacement Gearbox.

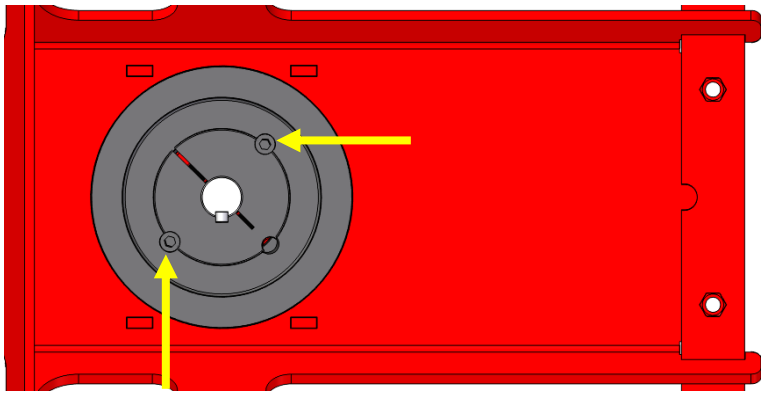

Remove the two highlighted Grub Screws from the Gearbox Pulley.

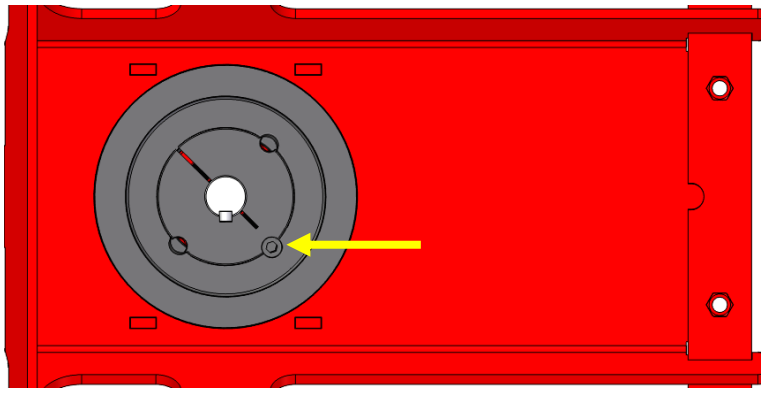

Re-insert one of the Grub Screws in the hole highlighted.

Gradually tighten until the Pulley separates from the Taper Lock Bush.

Continue to tighten this Grub Screw to drive the Taper Lock Bush upwards.

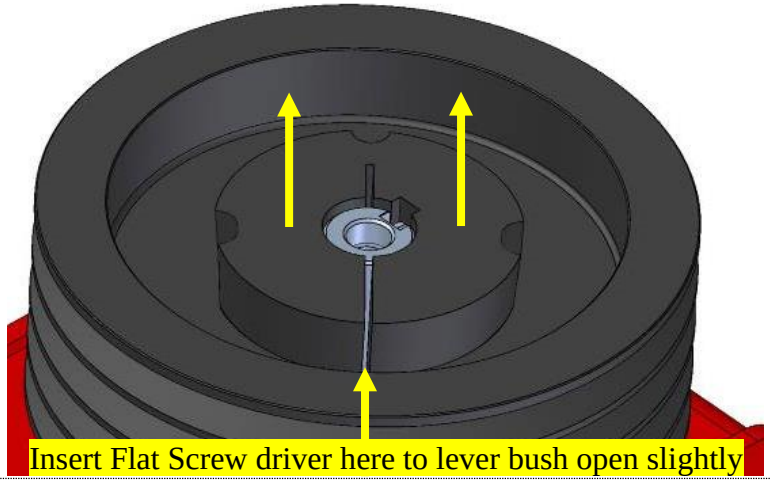

Insert Flat Screw driver here to lever bush open slightly

Insert a Flat Bladed Screwdriver in the Slot in the Biloc Bush.
Carefully lever the Bush open slightly.
Slide the Bush up and off the Gearbox Output Shaft.
Remove the Pulley.

IMPORTANT:
Apply **MINIMAL** leverage while removing the Taper Lock Bush, otherwise cracking can occur through the thinnest section of the Taper Lock Bush!

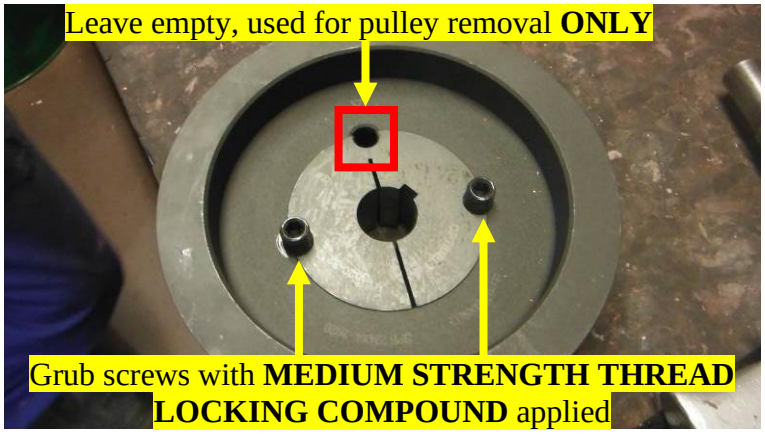

Clean the Bore in the Centre of the Pulley and the whole Taper Lock Bush with White Spirits and a Clean Cloth

Re-assemble the Pulley as shown with **MEDIUM STRENGTH THREAD LOCKING COMPOUND** applied to the Grub Screws.

Leave the Grub Screws loose at this stage.

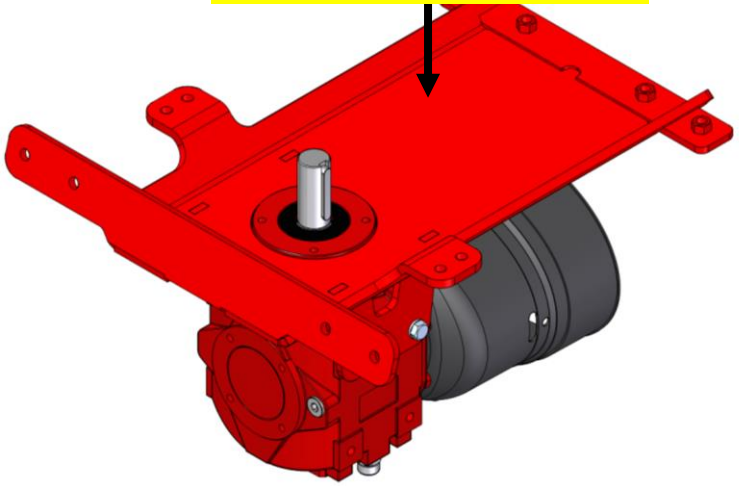

Support the Gearbox Mounting Plate.

Remove the fasteners and place these to one side.

Remove the Gearbox Mount Plate from the Gearbox.

Discard the old Gearbox.

THIS GEARBOX HAS BEEN FILLED APPROXIMALY 1400ml OF SAE80W90 EP GEAR OIL.

IMPORTANT:
Ensure that the oil is disposed of in accordance with local regulations regarding waste oil disposal!

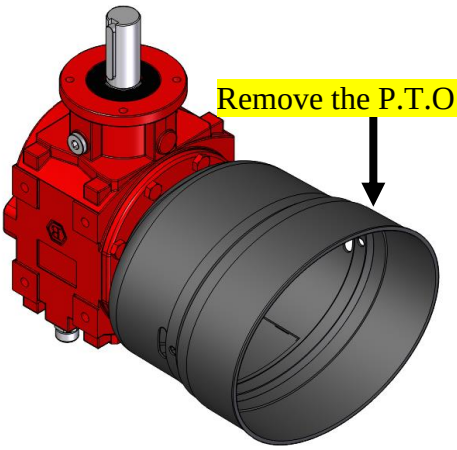

Remove the P.T.O Cone from the Gearbox.

Place the P.T.O Cone and Fasteners to one side.

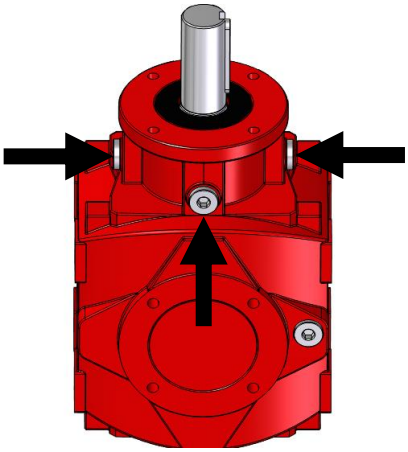

Collect the Replacement Gearbox.

Place on the Workbench as shown.

Check that the three plugs shown are **TIGHT!**

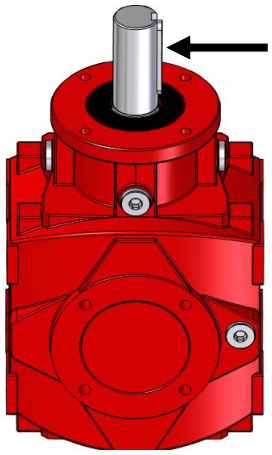

Remove the Key from the **OUTPUT** Shaft.

Using White Sprits and a Clean Cloth, clean the **OUTPUT** Shaft and the Key.

Apply a small bead of **HIGH STRENGTH RETAINING COMPOUND** to the Keyway.

Refit the Key into the Keyway and ensure it is fully seated.

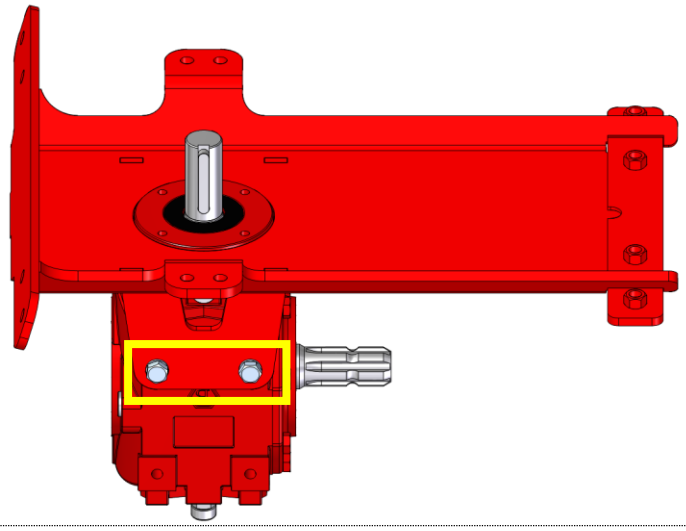

Offer up the Gearbox Mount Plate in the orientation shown.

Secure using the original fasteners.

One side shown.

MEDIUM STRENTH THREAD LOCKING COMPOUND is used on the threads of the Bolts.

Fully tighten.

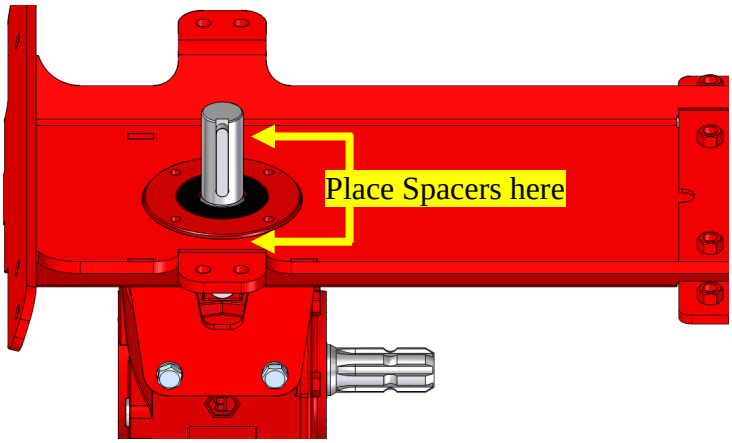

Place the support back under the Gearbox Mount Plate as before.

Using the measurement recorded earlier, place two spacers of the required thickness onto the Gearbox Mounting Plate.

Note:

These will be used to set the correct Pulley Spacing.

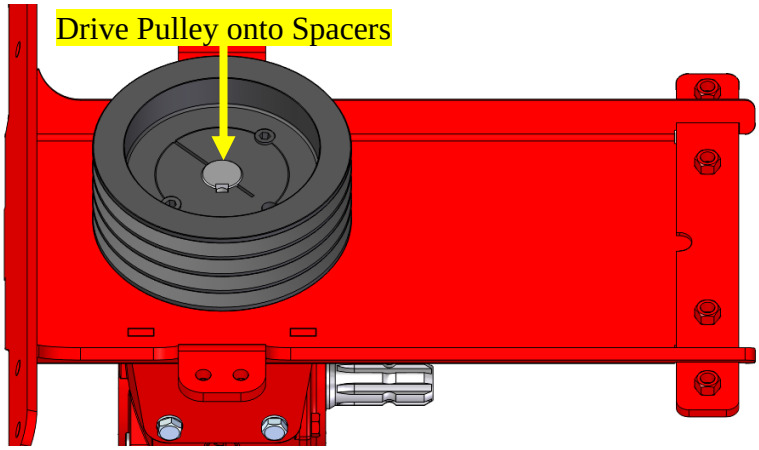

Align the Keyway with the Key fitted to the **OUTPUT** Shaft.

Lower the Pulley onto the **OUTPUT** Shaft.

Gently Drive the Pulley **DOWN** until it is **HARD** against the Spacers

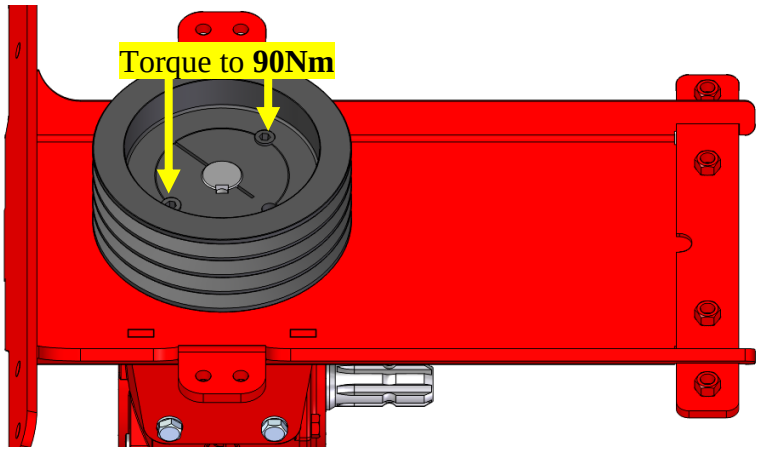

Tighten the Grub Screws to secure the Gearbox Pulley in position.

Torque the Grub Screws to **90Nm.**

Note:
An assistant may be required to hold the assembly steady!

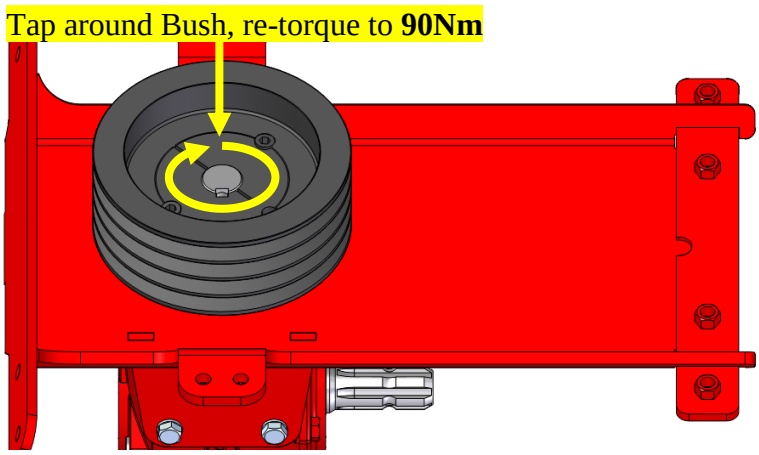

Gently tap around the Bush with a Hammer.

Then re-torque to **90Nm.**

Note:
This will ensure the Bush is seated correctly in the Pulley.

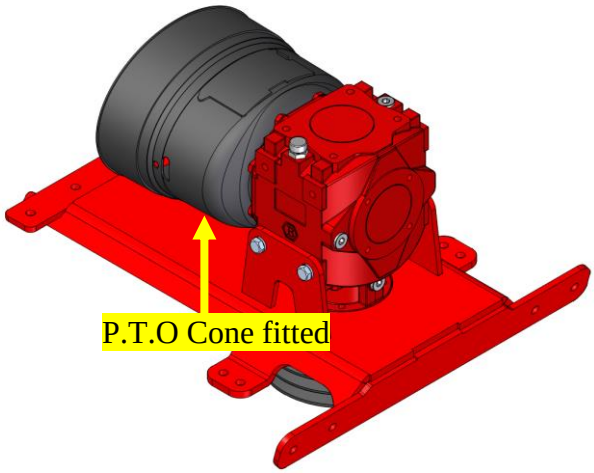

Flip the Gearbox Assembly over.

Refit the P.T.O Cone using its original fasteners.

MEDIUM STRENTH THREAD LOCKING COMPOUND is used on the threads of the Bolts.

Tighten to secure.

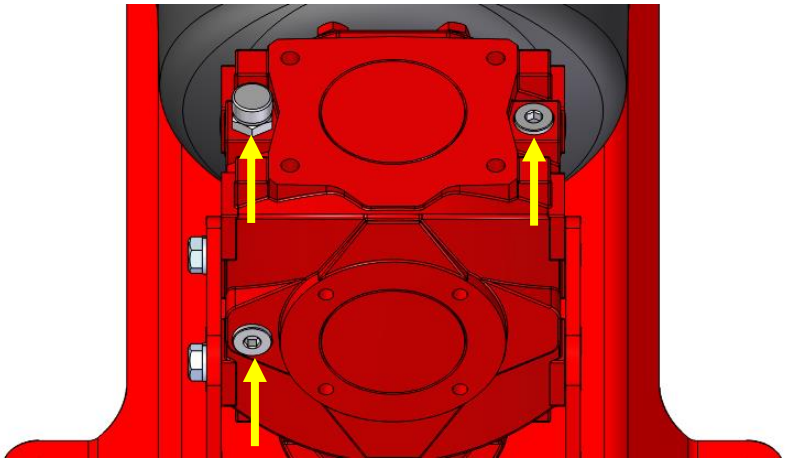

Remove the Breather, Top Plug and Fill Level Plug from the Gearbox.

Place to one side.

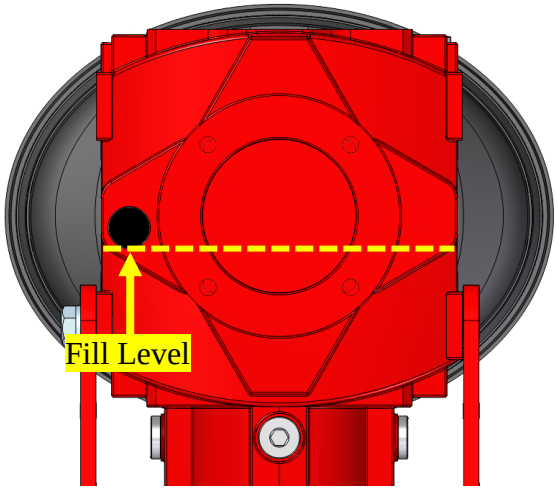

Pour **1400ml** of **SAE80W90 EP GEAR OIL** into the Gearbox through one of the Top Holes. Oil will **JUST** start to seep out from the Fill Level Hole.

Refit the Fill Level Plug and fully tighten.

IMPORTANT:

It is **CRITICAL** that the correct type and quantity of oil is used! Gearbox failure may result from using incorrect oil!

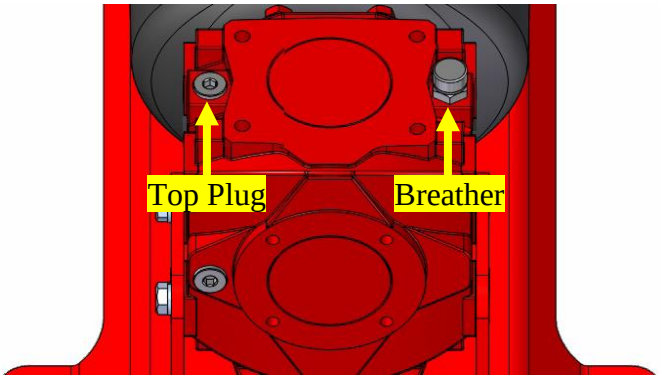

Refit the Top Plug and Breather as shown.

Fully tighten.

Note:

Ensure that the Breather is in the position shown, this prevents seepage from the breather by placing it opposite Gearbox rotation.

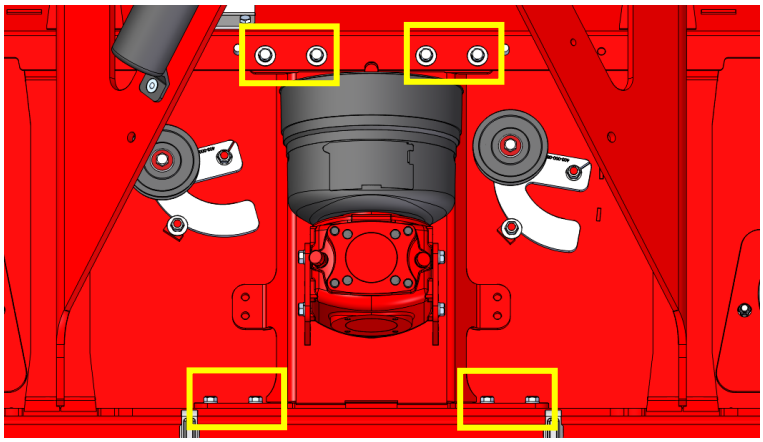

Offer up the Gearbox Assembly back to its original position.

Secure using the original fasteners.

MEDIUM STRENTH THREAD LOCKING COMPOUND is used on the threads of the Bolts.

Fully tighten.

Apply a coating of Grease or Copper Anti-seize to the Gearbox Input Shaft to minimise corrosion.

Refit and tension the Belts.

Ensure these are fitted to their original locations.

Installation is the reverse of removal.

See your Operators Manual for further detail on the belt tensioning process.

Refit the **SHORT** and **TALL** Gearbox Belt Retainers.

Ensure these are fitted to their original locations. See **PAGE 2** for detail.

Installation is the reverse of removal.

It is **CRITICAL** these are fitted to the correct locations otherwise the Wing Belts will not re-engage with the Gearbox Pulley as the wings are lowered!

VERY IMPORTANT!

- Check **ALL** Bolts and Nuts are tight.
- Check **ALL** Belts are tensioned correctly.
- Check Belts **DO NOT** foul on **ANY** components.
- **Ensure that no Tools or loose parts are left behind!**

Refit the Covers.

Installation is the reverse of removal.

See your Operators Manual for further detail on the Cover fitment process.

	Refit the P.T.O Shaft. Installation is the reverse of removal. See your operators Manual for further detail on the Cover fitment process.
This process is now complete.	