trimax MOWING SYSTEMS	SPARE PARTS INSTRUCTIONS # 17
Date Created: 12/05/16	**Product:** Pegasus S4
Title: LED Tail Light and Wiring Loom fitment	

SAFETY! Before attempting to make any adjustments or carry out maintenance on the mower, review the hazard identification table (section 3a of your Operator Manual) and take all necessary precautions.

Tools Required	Quantity	Area Used
8mm or 5/16” Spanner	1	Tail Light Nuts
Drill	1	Drilling holes for Tail Lights
5.5mm or 7/32” Drill Bit	1	Drilling mounting holes for Tail Lights
10mm or 3/8” Drill Bit	1	Drilling cable holes for Tail Lights
Side Cutters	1	Trimming Cable Ties

Prior to starting this procedure, isolate the power supply!

DO NOT work on live electrical equipment, as this is dangerous and may cause damage to electrical components and/or injury!

Caution:

Circuitry supplied suits **12-VOLT NEGATIVE EARTH SYSTEMS ONLY!**

Trimax or its agents will not be held liable for any damage or warranty claims occurring as a result of improper wiring!

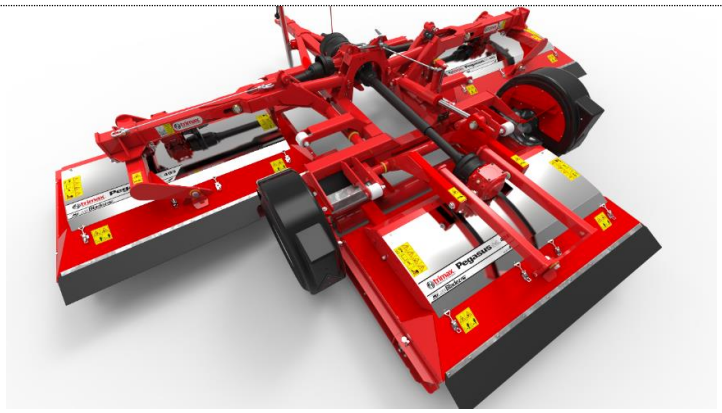

Ensure that the area around the Pegasus is clear of obstructions and bystanders.

Lower the Mower Decks of the Pegasus onto the ground.

Unbox the both Led Tail Lights **(421-000-056)** and discard all packaging.

Also discard the additional cable section provided with the Tail Lights as this in not required for this process.

Remove **ALL** fasteners from the Tail Lights and place to one side.

Mark and Drill out the Mud Guards.

Two Diagrams are provided on **PAGE 7 AND 8** of this instruction booklet that details the Hole positions that require drilling.

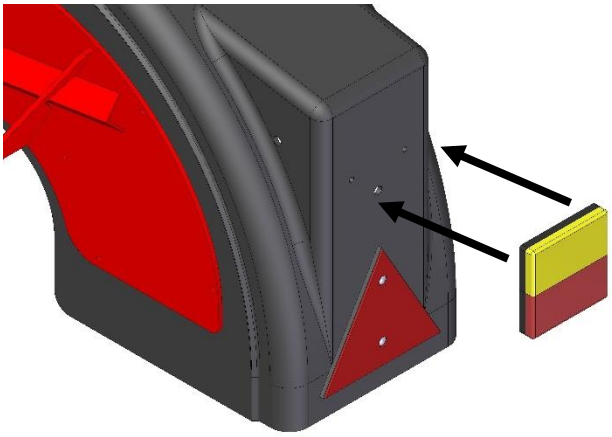

Once the holes have been drilled Offer up a Tail Light to a Mudguard.

Feed the Cable through the Large hole in the Rear Face of the Mud Guard first, then position the Tail Light so that the studs are fitted through the two small holes.

Note:
The Tail Lights are universal and can be fitted to either Mudguard.

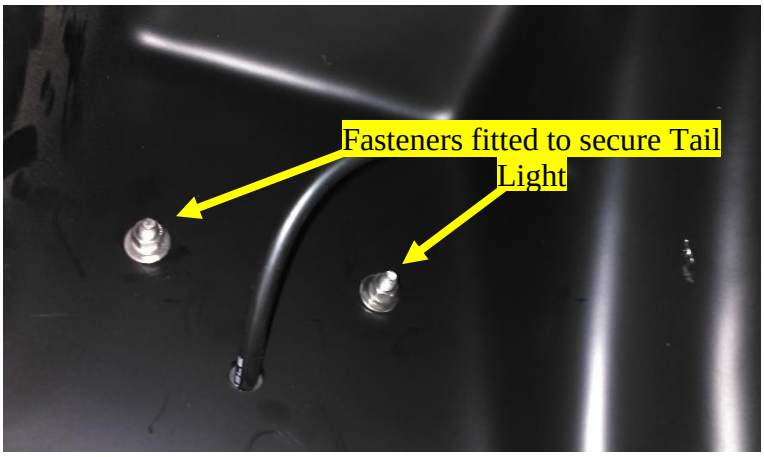

Secure the Tail Light to the Mudguard using the Flat Washers, Spring Washers and Plain Nuts that were removed earlier.

Fully tighten to secure.

This image taken from the inside of a Mudguard.

Feed the Cable through the second large hole that was drilled in the Mudguard.

Repeat this fitment process for the remaining Tail Light.

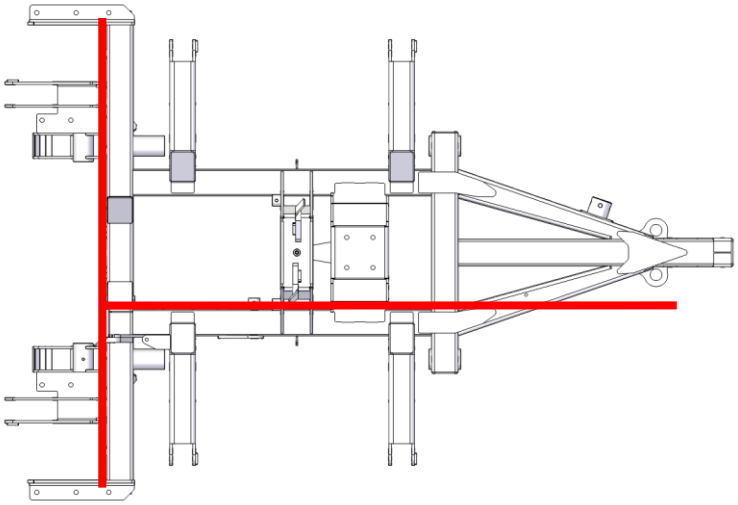

Shown opposite is a **TOP DOWN** overview of the Wiring Loom Layout.

The wiring locations are shown in **RED**

See the next steps for more detailed instruction on fitment.

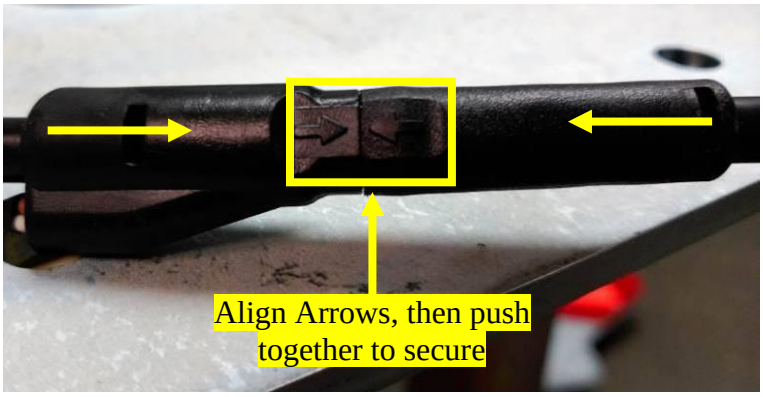

When connecting **ANY** plugs in the Wiring Loom, use the Following method.

Align the arrows present on each Plug and push together fully to secure.

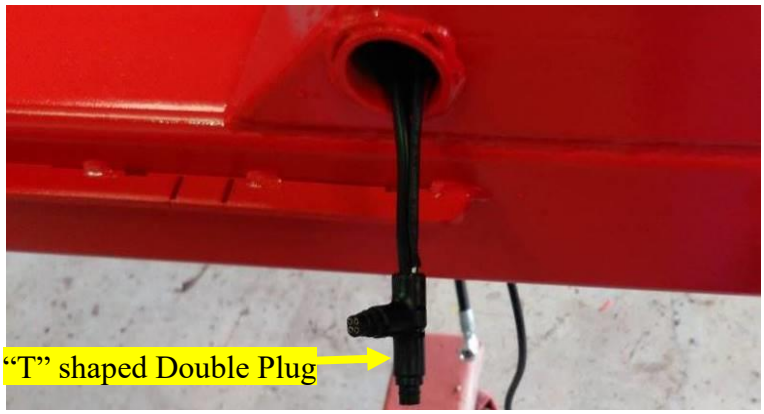

Collect the Main Wiring Loom **(421-000-067)**
This is the longest of the Cables and has a Single Plug at one end and a "T" Shaped Double Plug at the other.

Feed the Single Plug end through the Conduit present in the **REAR** of the Chassis Rear Cross Member.

Continue to feed the Loom through until the "T" shaped Double Plug is positioned as shown.

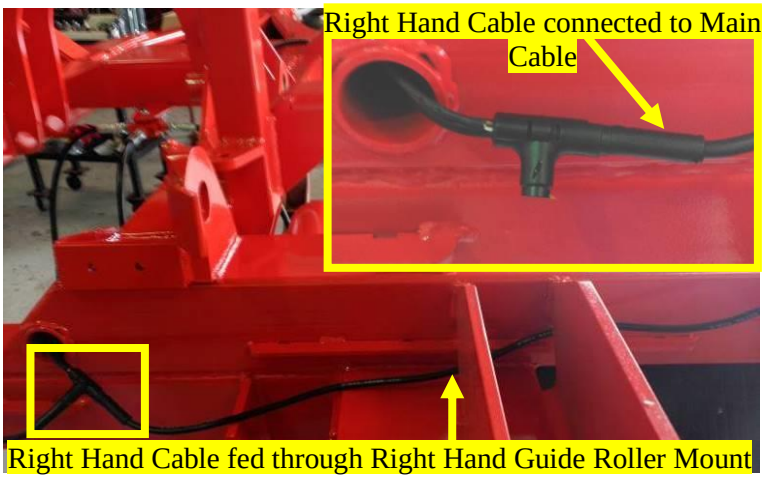

Attach the **1.3m RIGHT** Hand Cable (**421-000-068**) to the "T" Connector present on the Main Cable.

Feed this through the **RIGHT**-Hand Rear Guide Roller Mount as shown.

Note:
See inset for detail of the "T" Connector.

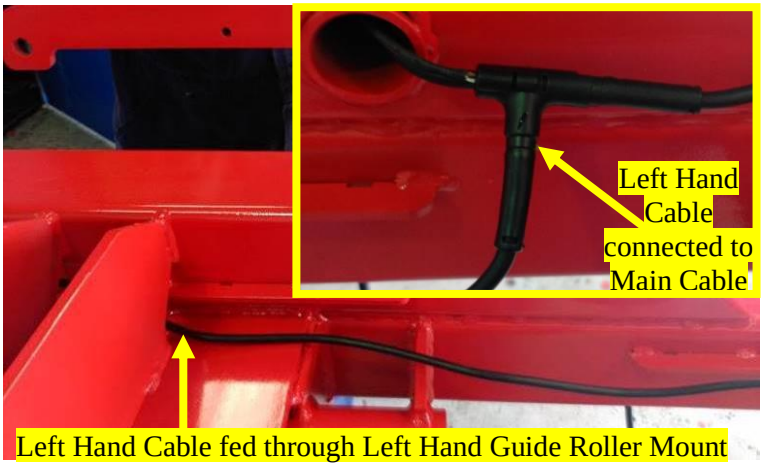

Attach the **1.9m LEFT** Hand Cable **(421-000-069)** to the remaining Plug on the "T" Connector.

Feed this through the **LEFT**-Hand Rear Guide Roller Mount as shown.

Note:
See inset for detail of the "T" Connector.

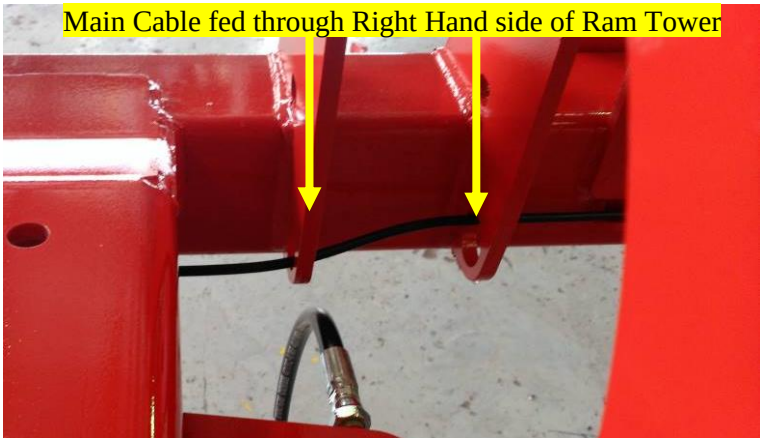

Feed the **3.7m** Main Cable (**421-000-067**) through large holes in the **RIGHT**-Hand side of the Ram Tower as shown.

Pass the Cable underneath the Chassis Gearbox Mount.

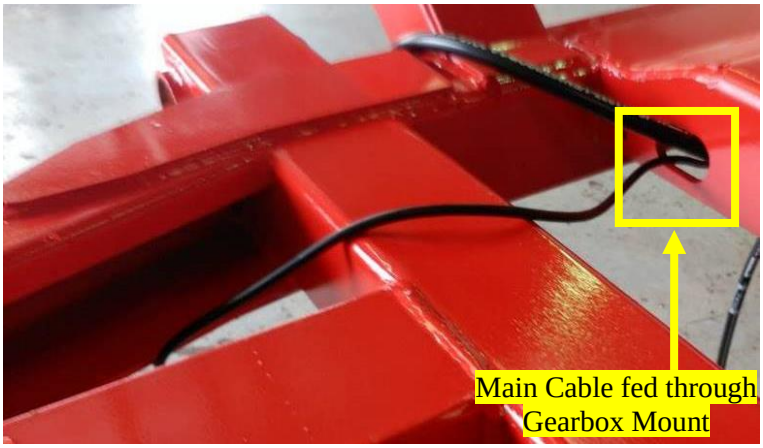

Feed the **3.7m** Main Cable (**421-000-067**) the through the Hole in the Gearbox Mount as shown.

Note:
This is the same Hole that the Main Hydraulic Hose runs through.

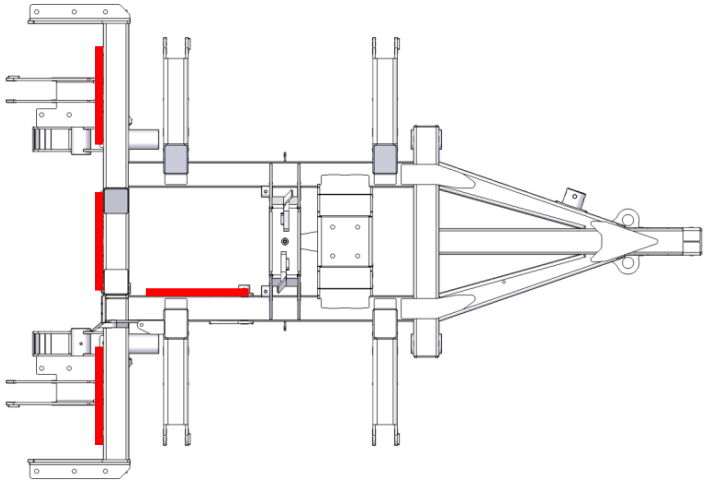

Secure the Cables to the four Cable Retaining Strips that are present on the Chassis using the supplied Cable Ties.

These are shown in **RED** in the image opposite.

Once secure, trim the "tails" off **ALL** Cable Ties.

Attach the 7-Pin Adaptor **(421-000-066)** to the **FRONT** of the Main Cable as shown.

Secure the Main Hose and Main Cable together using **2m** of Spiral Wrap **(450-900-014)**

Begin the Spiral Wrap around **30mm** inside the Gearbox Mount.

This will prevent the Hose and Cable from rubbing on the Gearbox Mount.

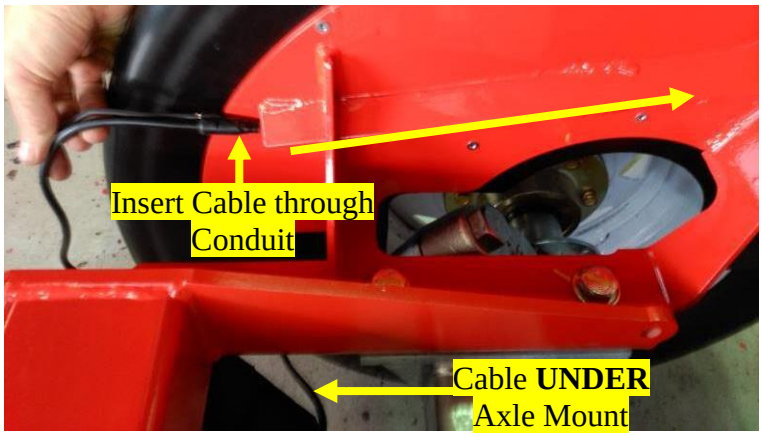

Pass the Cable **UNDERNEATH** the **OUTER** Axle Mount as shown.

Feed through the Conduit welded to the Mudguard until the Plug is through to the Tail light side of the Mudguard.

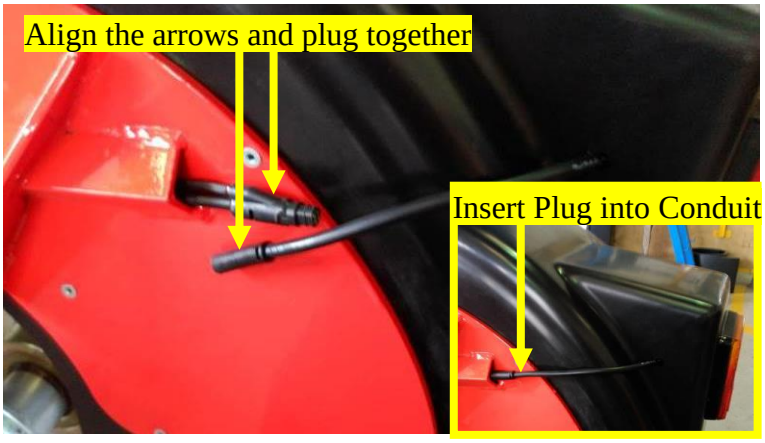

Plug the Tail Light into the Cable.

Align the arrows present on each Plug and push together fully to secure.

Slide the Plug into the Conduit welded to the Mudguard, see inset.

Repeat these steps for the remaining Tail Light.

Plug the 7-Pin Adaptor in to the Tractor and test that the Tail Lights function correctly.

Ensure that the Wiring Loom and Main Tractor Hose are clear of Tractor Tyres, driveline components and any other moving Parts!

Note:
See **PAGE 6** for wiring detail of the 7-Pin Plug if a different type of Plug is required for your specific application.

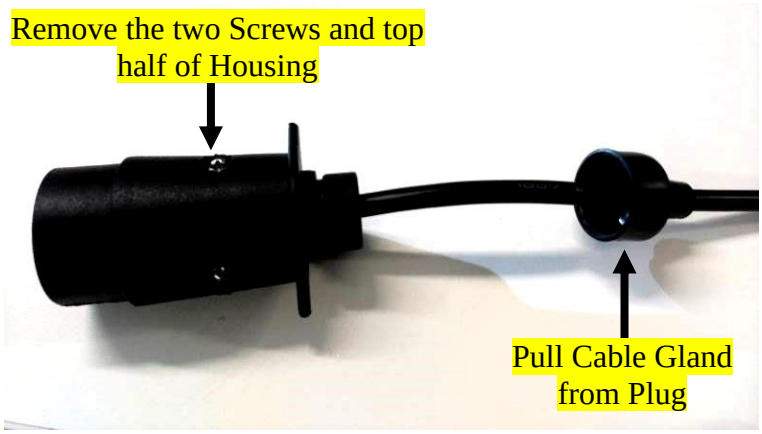

To replace the Plug, remove the Cable Gland from the Rear of the 7-Pin Round Adaptor Plug, this simply pulls off the back of the Plug.

Then remove the two screws from the Plug and remove the top half of the Plug Housing.

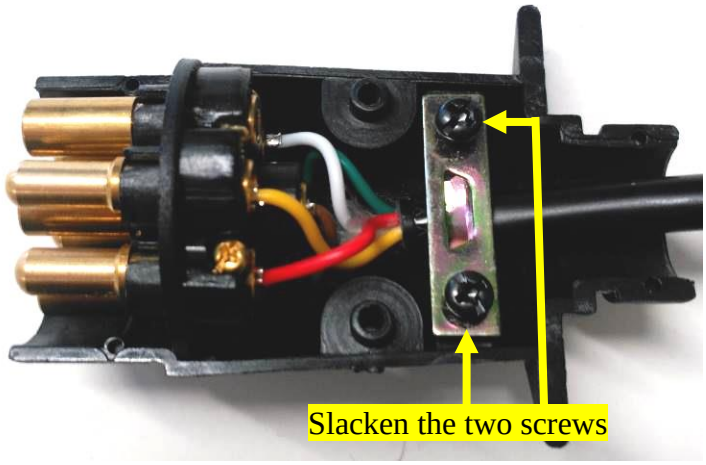

Once the casing is removed, slacken the two screws used to retain the Strain Relief Bracket.

This will allow the end of the Plug to be removed from the casing entirely, allowing access to the screws used to retain the wires.

7-Pin Round Plug Wiring Chart

Pin #	Circuit	Colour
# 1	Left hand turn signal	Yellow
# 2	Reversing signal	Black
# 3	Earth return	White
# 4	Right hand turn signal	Green
# 5	Service brakes	Blue
# 6	Brake lights/Stop lamps	Red
# 7	Rear lamps, clearance and side marker lamps	Brown

Each of the 7 positions inside the Plug are labelled with a small number moulded into the plastic housing.

Use the Chart Provided opposite to wire in your required Plug.

Note:
The Standard Trimax Lighting system does not use **Pin # 2** or **Pin #5**, these are provided for reference only!

This Fitment process is now complete.

REAR FACE OF PEGASUS S4 MUDGUARD

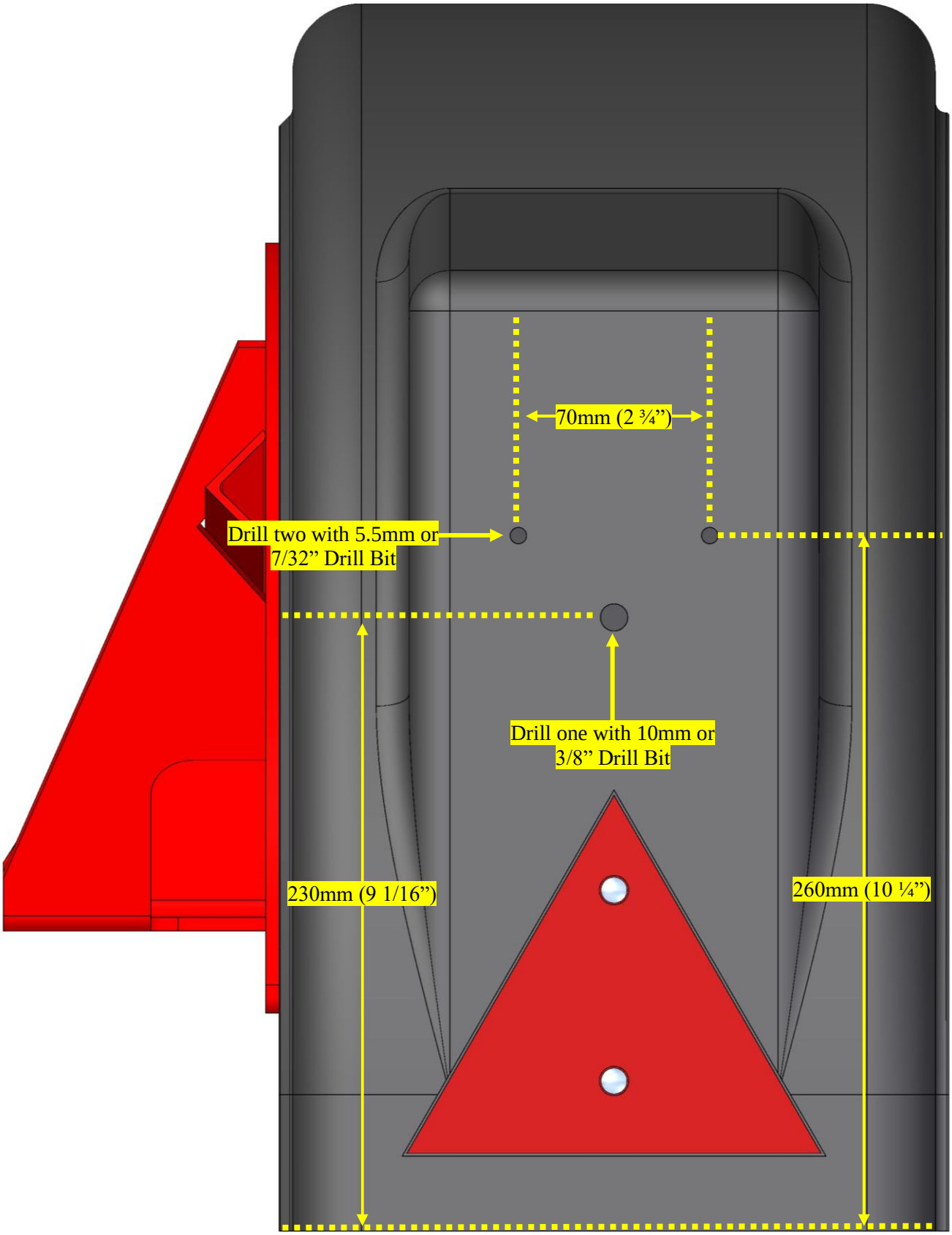

Please Note: A Right Hand Mudguard is shown, the Left Hand uses the identical dimensions.

INSIDE FACE OF PEGASUS S4 MUDGUARD

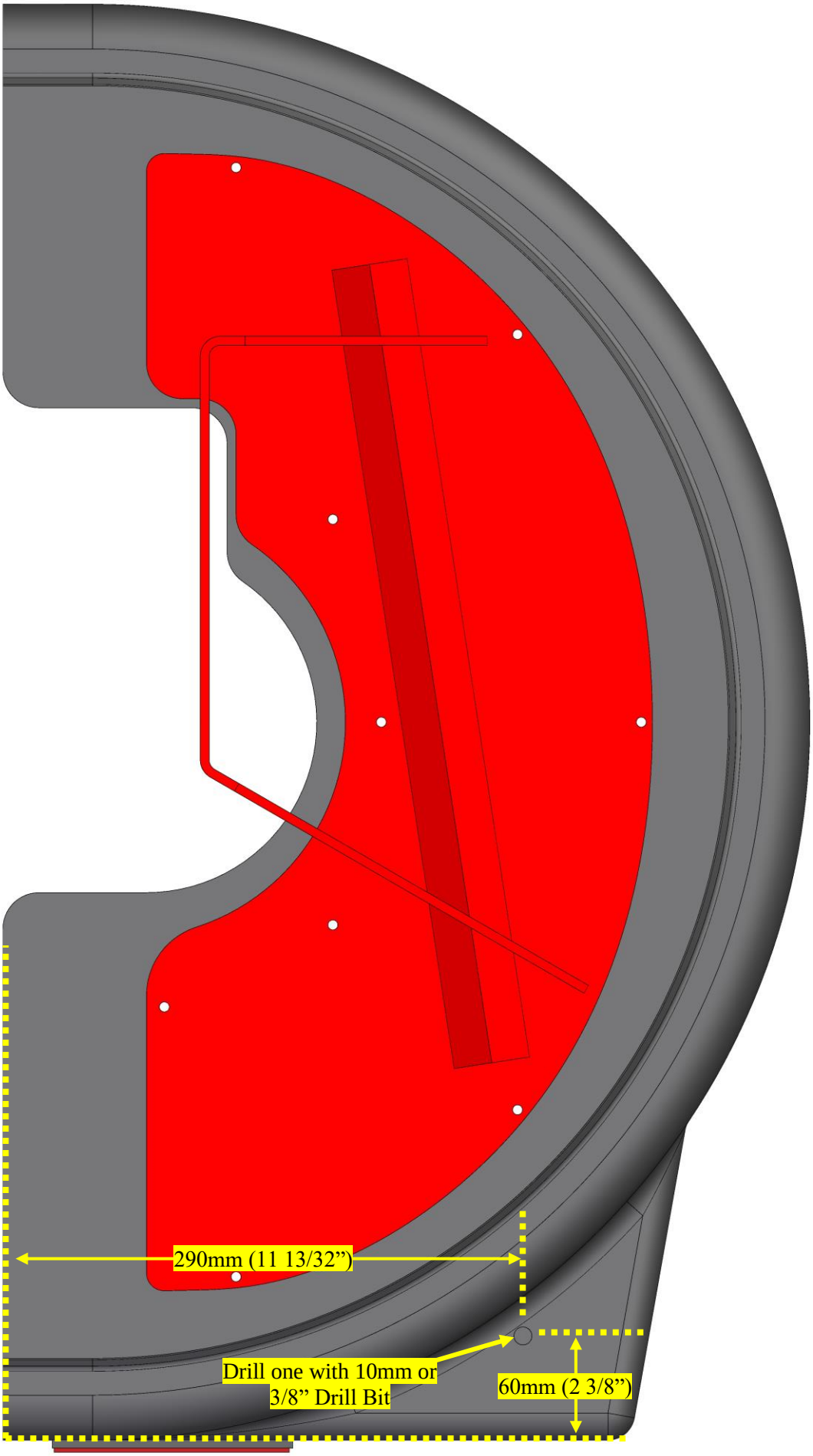

Please Note: A Right Hand Mudguard is shown, the Left Hand uses the identical dimensions.