trimax MOWING SYSTEMS	SPARE PARTS INSTRUCTIONS # 14
Date Created: 16/03/2016	**Product:** FlailDek S2/FX
Title: Belt Replacement and Tensioning	

SAFETY! Before attempting to make any adjustments or carry out maintenance on the mower, review the hazard identification table (section 3a of your Operator Manual) and take all necessary precautions.

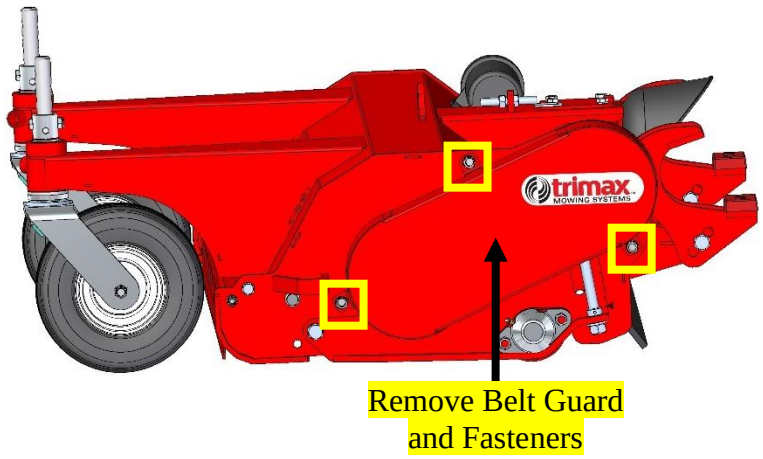

Remove the Belt Guard from the Flaildek.

This is achieved by removing the three M12 Plain Nuts and M12 Spring Washers located in the highlighted positions.

Note:
Place the Belt Guard and fasteners to one side where they will not get damaged! These will be re-fitted later.

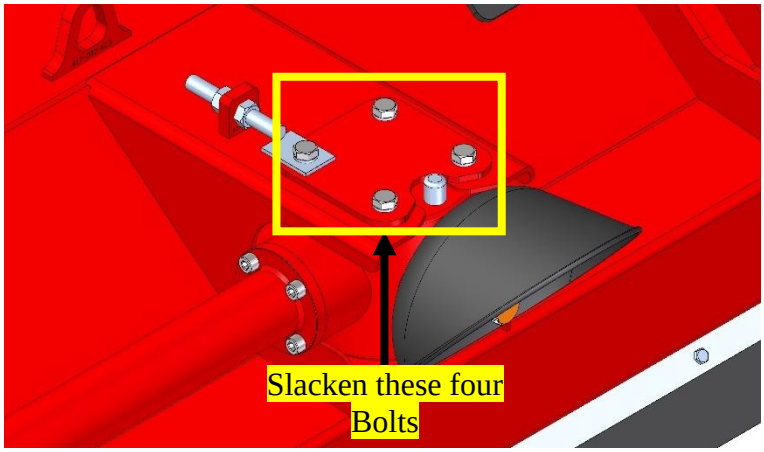

Slacken the **FOUR** M10 x 30 Bolts used to secure the Gearbox.

DO NOT REMOVE THESE BOLTS!

Note:
This is to allow the belt tension to be relieved!

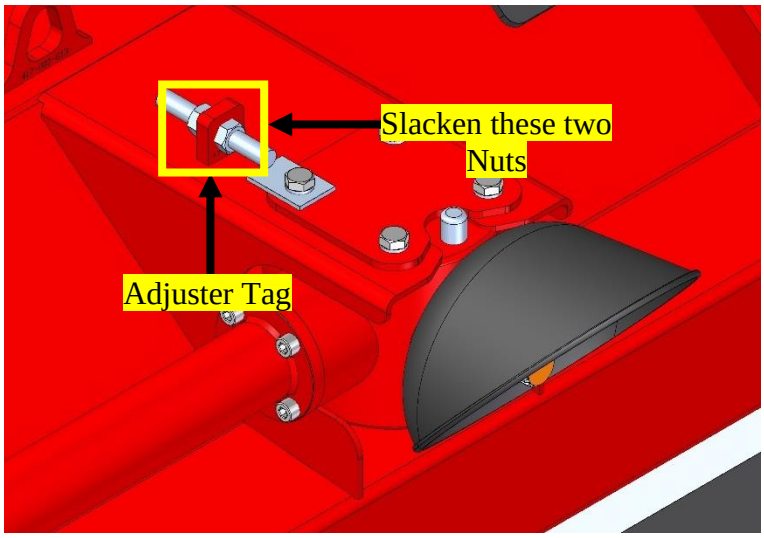

Slacken the **TWO** highlighted M12 Plain Nuts present on the Gearbox Adjuster.

Wind these **AWAY** from the Adjuster Tag that is welded to the Body.

DO NOT REMOVE THESE NUTS!

Note:
This is to allow the belt tension to be relieved!

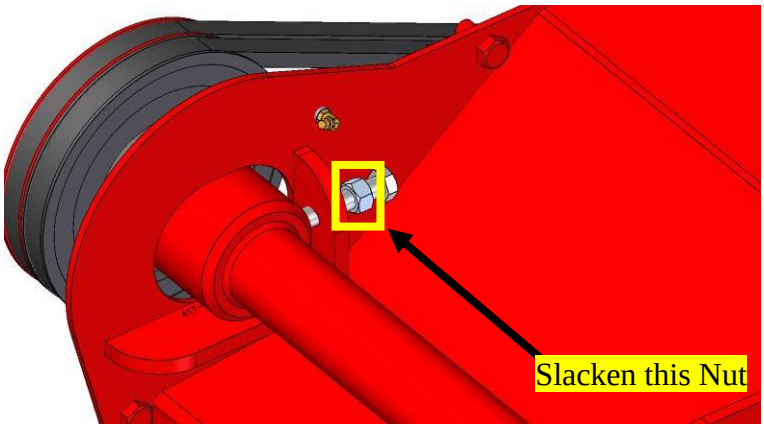

Slacken the highlighted M12 Plain Nut Prestent on the M12 x 60 Set Screw.

DO NOT REMOVE THIS NUT!

Note:
This is to allow the belt tension to be relieved!

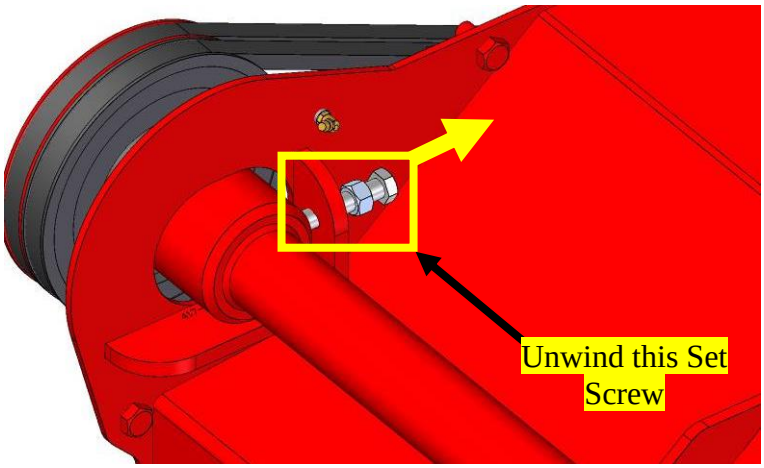

Unwind the M12 x 60 Set Screw in the direction shown by the **LARGE** arrow until it is flush with the Adjuster Mount.

A Ratchet Spanner will make this operation easier.

DO NOT REMOVE THIS SET SCREW!

Note:
This is to allow the belt tension to be relieved!

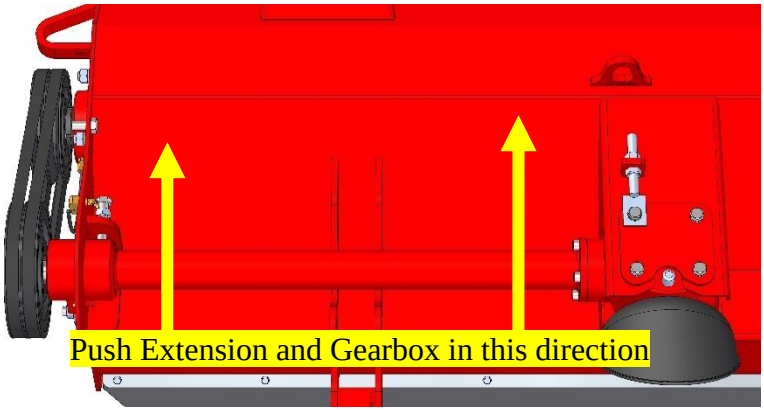

Push the Extesnion shaft and Gearbox Assembly as far as possible in the direction shown.

Note:
This is to allow the belt tension to be relieved!

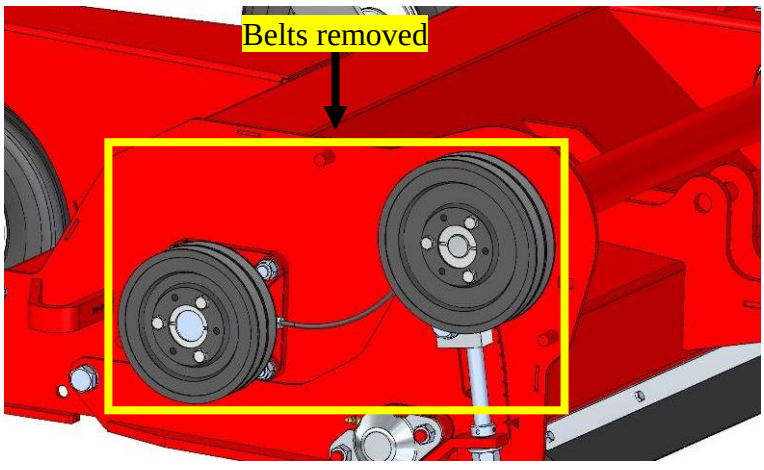

Remove the **OUTER** Belt First, then remove the **INNER** Belt.

Rotating the Driveline by hand may be required to remove the Belts.

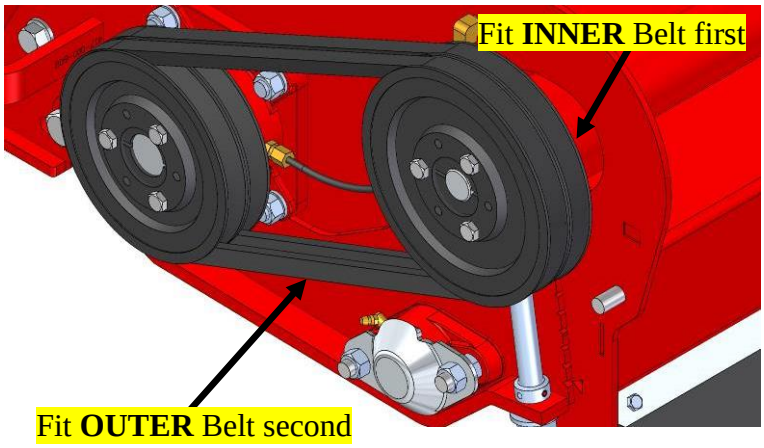

Fit the replacement Belts.

See your Operators Manual for Part Numbers.

Fit the **INNER** Belt first, then fit the **OUTER** Belt.

Rotating the Driveline by hand may be required to fit the replacement Belts.

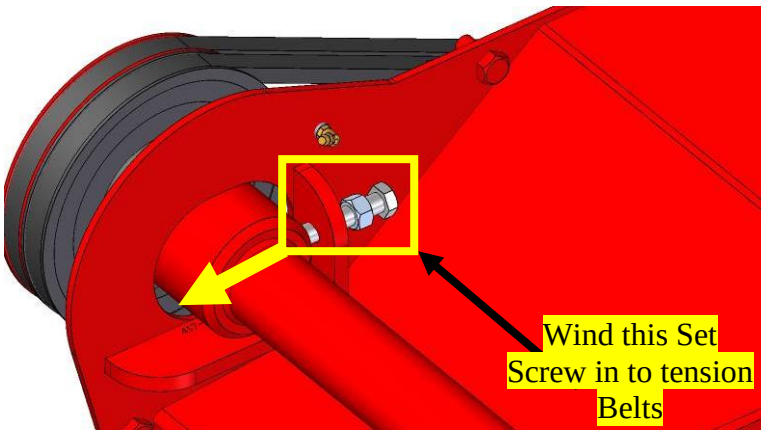

Adjust the M12 x 60 Set Screw in the direction shown by the **LARGE** arrow until the desired Belt Tension is achieved.

A Ratchet Spanner will make this operation easier.

Note:
Belts should have **10-15mm** of belt deflection when tensioned.

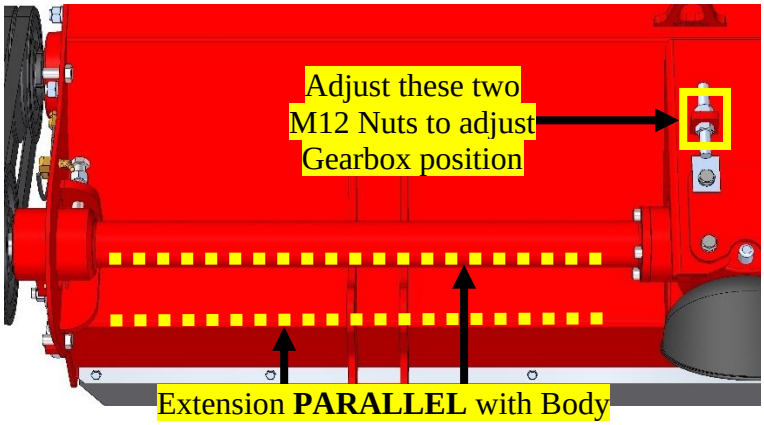

Adjust the position of the two highlighted M12 Plain nuts.

Set these so that the Extension Shaft and Gearbox Assembly is **PARALLEL** with the Body.

Note:
This is **CRITICAL**, otherwise Gearbox or Extension Shaft failure may occur!

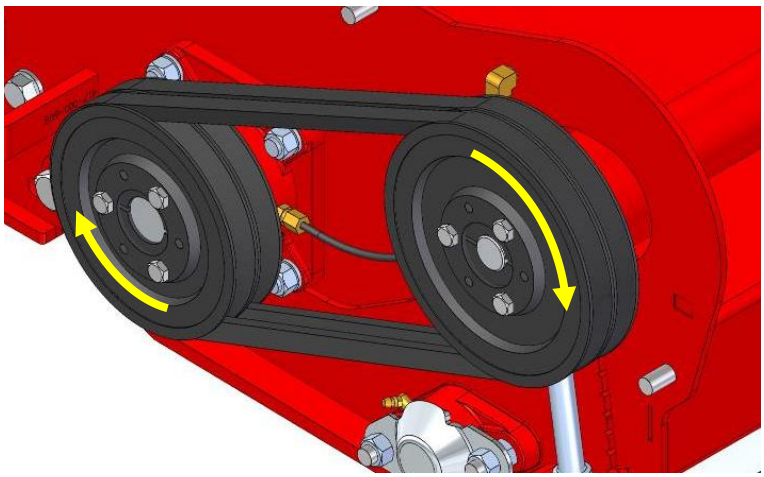

Rotate the top Pulley to rotate the Driveline **TWO** full revolutions.

Check the Belt Tension.

If required, re-adjust Belt Tension.

ENSURE THAT THE EXTENSION SHAFT IS PARALLEL TO THE BODY!
See above for tensioning detail.

Note:
Belts should have **10-15mm** of belt deflection when tensioned.

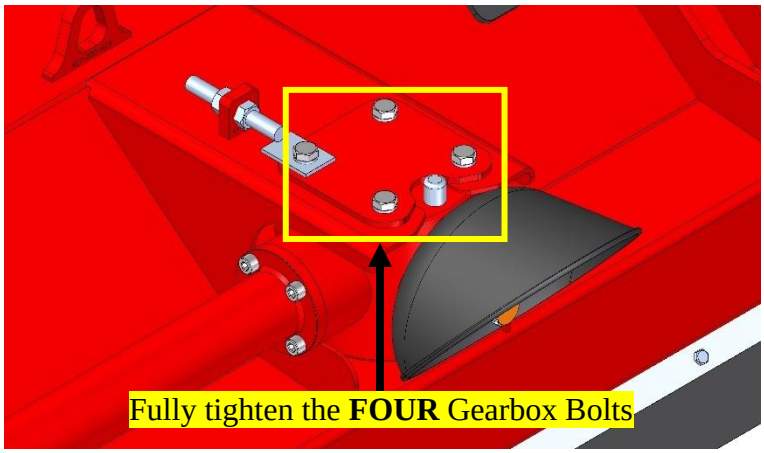

Once Belt tension is achieved and the Extension Shaft is **PARALLEL** with the Body, fully tighten the **FOUR** M10 x 30 Bolts used to secure the Gearbox.

Note:
It is **CRITICAL** the Extension Shaft is **PARALLEL** with the Body, otherwise Gearbox or Extension Shaft failure may occur!

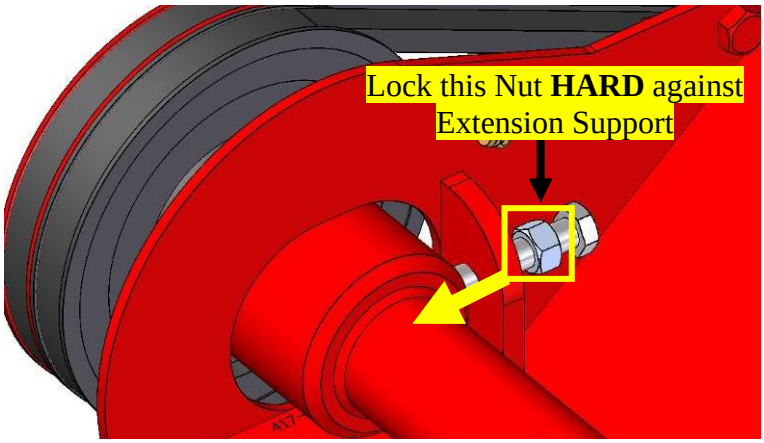

Wind the M12 Plain Nut in the direction shown by the **LARGE** arrow and lock it **HARD** against the Extension Support.

Lock the **TWO** M12 Plain Nuts on the Gearbox Adjuster **HARD** against the Adjuster Tag.

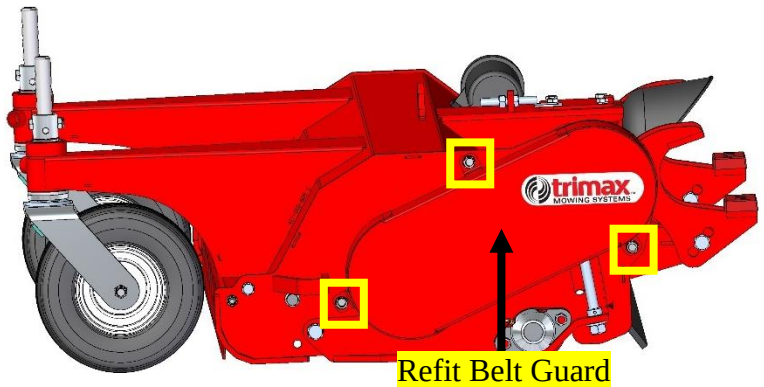

Refit the Belt Guard using the M12 Plain Nuts and M12 Spring Washers that were removed earlier.

Fastener Locations are highlighted.

Fully tighten.

trimax MOWING SYSTEMS

This Fitment process is now complete